DEPARTMENT OF MINES, MINERALS AND ENERGY
DIVISION OF MINERAL MINING

SURFACE BLASTER'S CERTIFICATION STUDY GUIDE

October 2013

Copyright 2013 Commonwealth of Virginia

Commonwealth of Virginia
Department of Mines, Minerals and Energy
Division of Mineral Mining
900 Natural Resources Drive, Suite 400
Charlottesville, VA 22903
(434) 951-6310

TABLE OF CONTENTS

Introduction.....1

Section

1 Duties and Responsibilities of the Certified Blaster 3-8

2 Hazard Recognition in Blasting 9-18

3 Basic Knowledge of Blasting 19-40

4 Blasting Design/Control 41-52

5 Blasting Effects 53-74

6 State Law and Regulations applicable to Surface Blasting Certification..... 75-88

Appendix..... A1-A34

I. Blasting Related Accident Abstracts A2-A10
   A. Injury/Fatality Cases
   B. Flyrock Incidents
II. Associated Articles..... A11-A16
III. Example Record Forms A17-A22
IV. Suggested Blasting Equipment Lists……A23-A24
V. Safety Talk Outlines/Summaries..... A25-A30
VI. Flyrock Prevention Communication Memorandum.....A31
VII. Flyrock Alerts..... A32-A33
VIII. Bibliography.....A34

This Guide has been developed for the purpose of preparing individuals for the Virginia Division of Mineral Mining Surface Blaster certification examination. This Guide is not intended to cover all particular circumstances surrounding the design, loading, and firing of explosives. The Division of Mineral Mining assumes no responsibility for the specific application of the material presented in this Guide.

INTRODUCTION

This study guide was prepared to assist in providing basic blasting knowledge and understanding of safe practices necessary to perform the duties of a surface (mineral mine) blaster. Every blaster must possess knowledge of theory and principles of explosives, as well as practical know-how in their storage, handling, transportation, and use. More importantly, every blaster must be aware of what is necessary to prepare and conduct good blasting operations that protect the health and safety of miners and other individuals. Considerations for the adjacent community and the environment must also be a top priority.

Mineral Miners must have one (1) year of blasting experience on a surface mineral mine working under the direct supervision of a certified blaster (or equivalent experience approved by Division of Mineral Mining) in order to qualify for State certification. A minimum score of 80% is required on each section of the State examination to obtain certification.

The use of explosives in the mineral mining industry continues to present a potentially serious risk of injury and death to miners. The prevention of such accidents depends, to a large extent, on two factors: (1) the knowledge and experience of persons responsible for the use of explosives and (2) well defined safety precautions to guide mine operators and miners in the safe conduct of blasting operations.

The prevention of blasting related accidents depends on careful planning and the faithful observance of proper blasting procedures and practices. Even the slightest abuse or misdirection of explosives can result in serious injury or death to mining personnel or the public.

Two cardinal rules must be acknowledged and understood when using explosives:

1. A blaster's most important responsibility is safety.
2. The safety of every blast is dependent on the people involved.

A surface blaster must have essential training and experience that not only develops skills, but proper safety attitudes as well. The same holds true for other mining personnel who handle explosives or assist in any way with blasting operations. All persons involved must know what is, and what is not safe…and why. Explosives safety is a habit that can only be developed through training and the repetition of proper procedures.

A surface blaster shall always follow State and Federal Laws and applicable regulations, as well as manufacturer's instructions when transporting, storing, handling, and using explosives. The appropriate manufacturer should be consulted in any situation when a blaster has any doubts or questions involving explosives.

This page intentionally left blank.

SECTION 1

DUTIES AND RESPONSIBILITIES OF THE CERTIFIED BLASTER

This page intentionally left blank.

SECTION 1 -- DUTIES AND RESPONSIBILITIES OF THE CERTIFIED BLASTER

- Regulatory Responsibilities
- Responsible person in-charge
- Activities conducted safely
- Experienced Person
- Task Training
- Design and Loading (flyrock/dangerous effects)
- Reviewing Detailed Drill/Borehole Logs
- Pre-Inspection
- Hazard Alert
- Clearing of Blast Site
- Weather Monitoring
- Loading Procedures
- Weather Monitoring
- Clearing of Blast Area
- Blasting Signals
- Firing of Shot
- Reporting Requirements
- Post-Blast Examination
- Disposal of Misfires
- Blast Reports/Shot Record
- Inventory Log
- Report Theft or Loss of Explosives

DUTIES AND RESPONSIBILITIES OF THE CERTIFIED BLASTER

Virginia Mineral Mine Safety Laws and Safety and Health Regulations for Mineral Mining require certain tasks to be performed by an individual certified as a Surface Blaster. Following is a list of the most critical duties and responsibilities of the certified surface blaster, with direct reference to the applicable section of the law or regulations.

1. A certified blaster shall be in direct charge of blasting activities. (4 VAC 25-40-800.A.)

2. Ensure that all activities under their supervision are conducted in a safe manner (45.1-161.292:6 (B) & 4 VAC 25-40-190)

   (a) Blasting crew has appropriate personal protective equipment. (4 VAC 25-40-1710/20/20/40)

   (b) Blasting crew not under influence of drugs/alcohol. (4 VAC 25-40-250)

   (c) Finger rings prohibited. (4 VAC 25-40-1780)

   (d) Prevent smoking within 50 feet of explosives or detonators. (4 VAC 25-40-800.F.)

3. Ensure that all miners with less than six months experience work with, or under the supervision of, an experienced person. (4 VAC 25-40-110)

4. Provide task training for all new, or reassigned, employees involved in blasting activities. (4 VAC 25-40-100)

5. Design and load the shot to prevent flyrock or other dangerous effects (ex: air overpressure, ground vibration, ground control). Report flyrock incidents immediately to DMM and note the details on the blast record. (4 VAC 25-40-800.D.)

6. Inspect the blast site for hazards. (4 VAC 25-40-800.G.2.)

7. Alert blasting crew to hazards involved: (4 VAC 25-40-800.B.)

8. Ensure that the <u>blast site</u> is cleared of all nonessential personnel and equipment prior to bringing explosives to the site. (4 VAC 25-40-800.G.4.)

9. Monitor weather conditions to ensure safe loading & firing. (4 VAC 25-40-800.G.1.)

10. Ensure proper loading procedures are followed: (4 VAC 25-40-800.H. through K.)

    (a) Review the drill logs for each borehole to determine specific downhole conditions prior to loading the shot. (4 VAC 25-40-800.H.)

    (b) Load boreholes as near to the blasting time as possible. (4 VAC 25-40-800.I.)

(c) Blast as soon as possible upon completion of loading. (4 VAC 25-40-800.I.)

(d) Keep explosives & detonators a safe distance from each other until made into a primer. (4 VAC 25-40-800.J.)

(e) Ensure primers are not made up or assembled in advance. (4 VAC 25-40-800.K.)

(f) Make sure detonators are inserted completely and securely into explosive cartridges used as primers and that priming is sufficient to detonate the explosive column in the borehole. (4 VAC 25-40-800.M.)

(g) Ensure that primers are inserted into the borehole slowly to prevent accidental detonation from impact, and that tamping is not done directly on the primer. (4 VAC 25-40-800.N.)

11. Remove all personnel/miners from the blast area prior to connection of the detonation device. (4 VAC 25-40-800.S.)

12. Ensure blasting signals (audible warning signal) are given & posted. (4 VAC 25-40-800.R.)

13. Fire the shot from a safe location. (4VAC 25-40-800.T.)

14. Report to the operator (who must report to DMM) any unplanned explosion, serious fire, serious or fatal injury, or any occurrence of flyrock. (45.1-161.292:51 & 52; 4 VAC 25-40-800.D.)

15. Perform a post-blast examination of the blast area, and ensure that the all clear signal is given prior to miners returning to work in the area. (4 VAC 25-40-800.U.)

16. Properly dispose of all misfires after waiting 15 minutes. Guard or barricade & post warning signs until corrected. (4 VAC 25-40-820.A., B., & C.)

17. Complete a detailed blast record for all blasts and maintain the records on-site for at least 3 years. (4 VAC 25-40-810)

18. Keep on-site an accurate inventory log of all explosives and detonators stored at the mine. (4 VAC 25-40-780.D.)

19. Ensure that any theft or unaccounted loss of explosives is reported to the local police, the State Police, U.S. Department of Justice, Bureau of Alcohol, Tobacco, Firearms, and Explosives, and the Division of Mineral Mining. (4 VAC 25-40-780.E.)

*In addition to the items listed above, some mining operations have blasting requirements set by a local government jurisdictional authority that the blaster must follow.

This page intentionally left blank.

SECTION 2

HAZARD RECOGNITION IN BLASTING

This page intentionally left blank.

SECTION 2 – HAZARD RECOGNITION IN BLASTING

- Introduction
  - Rock Structure
  - Types of Minerals in Virginia
  - Natural Geologic Hazards

- Misfires
  - Introduction
  - Prevention of Misfires
  - Handling of Misfires
  - Regulations Related to Misfires

- Wet Holes

- Extraneous Electricity
  - Definitions
  - Sources of Extraneous Electricity
  - Background (minimum firing current)
  - Minimizing the Probability of Stray Current

HAZARD RECOGNITION
IN BLASTING

Introduction

The certified blaster needs to be able to recognize safety hazards that are natural to the geological formation he is working with as well as safety hazards that can be created by blasting. Weather, in the form of rain, freezing temperatures, and thawing can also create hazards. Rock mass has a wide variety in geology and structure. Rock characteristics can vary greatly from one part of a mine to another. Bedding planes, joints, cracks, faults, open beds, cavities, mud seams, and zones of weakness/incompetent rock may be detected by a driller and aid the certified blaster in avoiding or creating a hazard. An accurate, detailed drilling log (required by 4 VAC 25-40-1095) and good communications between the certified blaster and driller can help in maintaining a successful blasting program.

Rock Structure

Rock structure can be described as the features produced in a rock by movements during and after its formation. Rock structure is the result of what has happened to rock over millions, even billions of years.

Classification/Types of Minerals Mined in Virginia

Classifications:

- Sedimentary Rock – a layered rock, formed through the accumulation and solidification of sediment, which may originally be made up of minerals, rock debris, animal or vegetable matter.

  Examples: Limestone, Sandstone, shale, gypsum, conglomerate, salt

- Igneous Rock – formed from molten material that solidified upon cooling.

  Examples: Granite

- Metamorphic Rock – formed (while in the solid state) by the transformation of pre-existing rock beneath the earth's surface through agencies of heat, pressure, and chemical active fluids.

  Examples: Slate (was shale), quartzite (was sandstone), marble (was limestone)

Natural Geologic/Ground Control Hazards

Natural geologic/ground control hazards are defined as a condition in the rock or mineral deposit that may pose a safety or health threat to personnel. This can result from mining activity or from natural geology of the formation.

Faults – fractures with subsequent rock movement along one or both sides of the fracture zone. A fault may contain fine-grained material or recrystalized rock. During blasting, faults can cause overbreak or backbreak to a fault plane. Venting or blowout could occur if material within the fault zone is weakly cemented/formed.

Bedding – the layering or planes dividing rock formations. Separation of beds can be fractions of an inch to tens of feet apart.

Joints – cracks or fractures in rock with no associated displacement. A joint can be intersecting with as well as perpendicular or parallel to bedding planes. It is common for a complex pattern of many joints to be present in a single geologic unit. Joints are usually most troubling relative to distributing and confining explosive energy within a rock mass, especially if existing joints are open.

Contacts – places or surfaces where different rock types come together.

Hazards that can result from mining activity include overhanging material, loose unconsolidated material on the face, back-break, excess toe, oversize rock, and airborne contamination/exposure of harmful substances (silica, asbestos).

For most mineral mines, maximum dust exposure limits are determined by the amount of free silica (quartz) found in airborne dust in their work environment. The percentage of quartz varies with the type of rock, sand, or mineral being mined. Granite tends to have a moderate to high percentage of silica while limestone is normally low; therefore a miner working at a limestone quarry has a much higher permissible exposure limit (PEL) for dust than a miner working at a granite quarry.

Miners who inhale tiny (respirable) particles of silica run the risk of contracting "silicosis" which can seriously impair their ability to breathe normally. Any type of dust, fume or mist inhaled can be detrimental; therefore, miners should minimize their exposure by ensuring that control measures such as water sprays and dust collectors are operational, and by using appropriate PPE supplied by the mine operator.

Hazards that can result from geological conditions include fault zones, slip planes, bedding, caves/cavities, fracture formations, mud/dirt seams, weathering, aquifers, and joints/folds.

An examination for unsafe conditions, and the responsibility to report such conditions, is the direct responsibility of each miner (4 VAC 25-40-460).

Misfires

Introduction

The certified blaster's search for misfired explosives after the shot must be thorough since every charge that does not detonate truly represents a potential accident.

The rule in blasting is, or should be, that the best way to handle a misfire is to prevent it from occurring in the first place.

Prevention of Misfires

The best way to prevent a misfire is to become familiar with the most common causes. Twelve of the most common causes are listed below:

1. Poor wire/tubing connections (corrosion, dirt)
2. Bare splices on the ground, lying in water or wet areas
3. Improper detonator circuit
4. Improperly balanced detonator circuit
5. Current leakage or damaged tubing
6. Mixing detonators from different manufacturers in the same blast
7. Detonators not wired or connected into the circuit
8. Defective or inadequate firing line
9. Inadequate power supply
10. Improperly made primers
11. Using nonwater resistant explosives in wet holes
12. Improper loading practices

Occasionally, a primer will detonate but not initiate a portion of the powder column. These misfires are often due to ground movement cutoffs, inadequate priming, deteriorated explosives, or bridged charges in the borehole.

Handling of Misfires

Under most conditions the safest way to dispose of a misfire is to reshoot it, provided there is sufficient burden around the borehole to prevent flyrock hazards. If electric detonators fail or if nonelectric initiators fail, an attempt to shoot the borehole with a fresh primer may be made if deemed safe by the certified blaster in charge.

This work will require the stemming to be removed; such work must be done with great care. The best method to remove stemming is with a stream of water through a plastic pipe or hose. Once the stemming is removed a new primer may be inserted in the borehole. There have been cases where the second primer did not initiate the entire powder column but generated enough heat to cause the original misfired charges to start burning. This will result in a

dangerous "hang fire" which may detonate several minutes later. The sound of a reprimed charge is not a certain indication that the original misfire has completely detonated.

Regulations Related to Misfires

4 VAC 25-40-820 -- provides for a 15 minute waiting time before entering the blast area; disposal to be done in a safe manner by the certified blaster; and the guarding or barricading and posting of warning signs until the misfire is cleared.

4 VAC 25-40-800.A. -- a certified blaster shall be in direct charge of blasting activities.

Wet Holes

Boreholes that contain moisture should not be loaded with unprotected ANFO. A water-resistant ANFO product should be used. Water readily dissolves ammonium nitrate prills, leading to desensitization of the ANFO. This desensitizing effect of water has been demonstrated in many poor blasts where ANFO was used in wet boreholes without sufficient emulsion or external protection.

Wet hole bags can easily become separated by floating in water or mud in the borehole. Frequent priming of every other bag can help overcome the substandard performance from this problem.

In severe water conditions, a water-resistant product should be loaded as packaged and shot as soon as possible. Certified blasters must know their water conditions and use products that will perform safely.

In addition to wet hole explosive bags, other measures used to combat water problems are borehole liners & dewatering.

Extraneous Electricity

Definitions

Stray Current – current that flows outside an insulated conductor system.

Static Electricity – electrical energy that is stored at rest on some person or object.

Sources of Extraneous Electricity

1. Lightning discharges to ground from electrical storms.
2. Stray ground currents from poorly insulated and improperly grounded electrical equipment.
3. Radio frequency (RF) energy from transmitters.
4. Induced currents, present in electromagnetic fields, such as those commonly found near high-voltage transmission lines.

5. Static electricity generated by wind-driven dust and snowstorms, by moving conveyor belts, and by the pneumatic conveying of ANFO.
6. Galvanic currents generated by dissimilar metals touching or separated by a conductive material.

Static electricity can be generated in the atmosphere and stored on any insulated and ungrounded conductive body, such as a person or truck and can be discharged through detonator wires.

Intense high-frequency radiation can accidentally initiate electric detonators. Therefore, an investigation of any potentially hazardous source of radio frequency (RF) energy near a blasting site should be conducted when using electric detonators. The Institute of Makers of Explosives (IME) Safety Library Publication #20 classifies sources of radio frequency and lists safe distances.

Other sources of possible stray current include electric fences in the blast area, metal fences, machinery housings, conductive rock strata, and any other object in contact with a defective insulated electrical source.

Lightning undoubtedly represents the greatest single hazard to blasting because of its erratic nature and high energy whether using an electric, electronic, or nonelectric system. **In the interest of safety, blasting should be suspended, and all personnel should be evacuated to a safe distance from the blast area whenever lightning storms are in the vicinity.** The danger from lightning is considerably increased if there is a transmission line, water line, compressed air line, fence, stream, or other conductor available to carry the current between the storm and the shot location. A common sense rule is to evacuate the blast area when thunderstorm activity comes within 5 miles of the blast site.

Background

The minimum firing current for commercial electric blasting caps presently manufactured in the United States is approximately **0.25 amperes** (250 milliamperes). The IME has established the maximum "safe" current permitted to flow through an electric blasting cap without hazard of detonation as 0.05 amperes (50 milliamperes).

When extraneous currents such as stray current exceeds .05 amps, the source of current must be traced and eliminated before electric-blasting caps can be used safely. **If the source of current cannot be traced and eliminated, then a nonelectric system of initiation must be used.**

Safety Procedures to Help Minimize the Probability of Stray Current

1. If an electrical power distribution system and/or electrically operated equipment are located near a blasting site, then periodic checks of the wire and insulation should be made to ensure it is maintained in good condition.

2. All metal objects, pipes, framework of metal housings, etc., should be provided with a low resistance ground to earth.

3. Remove all possible potential sources of stray current such as powerlines, lights, electric equipment, batteries, etc. from the blast site prior to the loading of explosives.

4. Known stray current sources located near blasting should be de-energized and locked out when explosive materials are present.

5. Do not remove shunts from detonator legwires except for continuity testing, after which they should be re-shunted, and kept shunted until tying them into the blast circuit.

6. Ensure that all splices are insulated from the earth or ground and other potential stray current sources. Always use a well-insulated firing line that is not damaged and is not near any possible source of stray current.

7. Precautions to take during dust and snowstorms include placing the electric detonators on the ground and slowly extend the legwires along the ground.

8. Electric blasting should be suspended when severe dust or snowstorms are present.

9. All moving equipment in the blast site that can generate static electricity should be shut down while blasting circuits are being connected and until the blast has been fired.

10. A semi-conductive loading system for ANFO will help to bleed off the static charge as it is generated.

11. Make certain that there are no radio frequency transmitting devices (including cellular phones) closer than recommended by The Institute of Makers of Explosives (IME) and be on the lookout for new structures/antennas.

12. Keep mobile radio transmitters in the “off” position near blasting areas and place adequate signs to remind mobile transmitter operators.

This page intentionally left blank.

SECTION 3

BASIC KNOWLEDGE OF BLASTING

This page intentionally left blank.

SECTION 3 – BASIC KNOWLEDGE OF BLASTING

- Explosive Properties – General
- Explosive Products
  - Dynamite
  - Emulsions
  - Anfo – Blasting Prills
  - Blends
  - Boosters
  - Initiating Devices
    - Electric
    - Electronic
    - Non-electric
      - Detonating Cord
      - Shock Tube
  - Black Powder
- Blasting Instruments
  - Blaster's Multimeter
  - Blaster's Ohmmeter
  - Blasting Machines
  - Seismograph

BASIC KNOWLEDGE OF BLASTING

Explosive Properties

An explosive is a chemical compound, or mixture of compounds, initiated by heat, shock, impact, friction, or a combination of these conditions. Once initiated, it decomposes very rapidly in a detonation producing a rapid release of heat and large quantities of high-pressure gases. The gases produced expand rapidly with sufficient force to overcome confining forces, such as the rock surrounding a borehole. High explosives are categorized as being able to be initiated by a No. 8 test blasting cap, and which react at a speed greater than the speed of sound through the explosive medium.

If improperly or accidentally initiated, explosives may burn without the aid of atmospheric oxygen. The flame burning of explosives is called deflagration.

The energy released by the detonation of explosives manifests itself in four basic ways: 1) rock fragmentation; 2) rock displacement; 3) ground vibration; and 4) airblast. In addition, toxic and non-toxic fumes are also produced, and are released into the atmosphere.

All explosives have specific characteristics which differentiate them, and which can be measured to determine their performance under specific blasting conditions. A brief explanation of some of the more important explosive properties follows.

Detonation Velocity

Detonation velocity (DV) is the speed at which the detonation wave travels through a column of explosives. DV is typically measured in feet per second (fps), or meters per second (m/s), and may be affected by many factors including explosive type, diameter of the explosive column, confinement, and temperature. Most commercially available explosives in use today have detonation velocities in the range of 10,000-18,000-fps. Each explosive has an ideal velocity, which is dependent on the explosive's composition and density.

Depending on the type of explosive, and how it is confined, the diameter of the product will influence the DV up to a certain charge diameter. Generally, the larger the diameter the greater the velocity until the explosive's maximum (ideal) velocity is reached. DV is also strongly dependent on the density (packing density in a drill hole) of the explosive. All explosives also have a critical diameter, which is the smallest charge diameter at which the detonation process will support itself once initiated.

Confinement of the explosive charge will also affect the DV. Generally, the greater the confinement of the explosive, the higher the DV. For some explosive products such as ANFO, dynamites, emulsions, heavy ANFO, and water gels the effect of confinement can be significant in small diameter holes. Confinement usually has less influence on DV as the charge diameter increases.

Adequate priming of an explosive charge is critical in ensuring that the detonation will reach its maximum velocity as quickly as possible. If priming is inadequate the charge may fail to detonate, may build up slowly to its final velocity, or may initiate a low order detonation or deflagration. Blasters should always follow the explosive manufacturer's recommendations for priming in order to ensure maximum velocities.

Density

The packing density of an explosive loaded in a borehole is one of its most critical properties. Density affects sensitivity, DV, and critical diameter of the explosive charge. It is defined as the weight per unit volume and is typically expressed in grams per cubic centimeter (g/cc). The density of most commercial explosives ranges from a low of about 0.8 g/cc to a high of about 1.6 g/cc. Free-flowing ANFO products are in the low density range of approximately 0.8 - 1.15 g/cc. Cartridge explosive products such as emulsions, water gels, and dynamites have densities in the range of 0.9 -1.6 g/cc. Since water is considered to have a density of 1.0 any product with a density of less than 1.0 will float. Blasters should also realize that muddy water or salt water in a borehole might have a density greater than 1.0 g/cc.

Sensitivity

Sensitivity is a loosely used term that indicates the absolute or relative ease with which an explosive can be induced to chemically react. Different explosives will show differing sensitivity to stimuli such as shock, low velocity impact, friction, electrostatic discharge, or other sources of energy. The shock initiation sensitivity is the ease with which an explosive can be induced to detonate. Some explosives require only a single detonator for initiation, while others require large booster charges.

Detonator, or cap sensitivity, is one measure commonly used to indicate product ease of initiation, and also to classify products for safety in transportation, storage, and use. The standard used is the explosives' sensitivity to initiation by a No. 8 test blasting cap. Blasting agents are an example of an explosive product that will not initiate with the detonation of the No. 8 test cap, under test conditions.

Fumes

The chemical reaction resulting from the detonation of explosives produces water vapor, carbon dioxide, and nitrogen, and also, in smaller concentrations, poisonous gases such as carbon monoxide and nitrogen oxides. Fumes differ from smoke, in that smoke is mostly steam and the solid products of combustion and detonation. Exposure to smoke, especially that produced from dynamite, should be avoided as severe headaches may result from contact with small particles of unreacted nitroglycerin in the smoke. Some carbon monoxide and oxides of nitrogen will be produced from all detonations, with the amounts depending on the conditions of the detonation. It is imperative that adequate waiting periods be observed before allowing personnel to enter the blast area, as some toxic gases are both odorless and colorless. Absence of smoke is no guarantee that noxious gases are not present in the blast area; therefore, always ensure the area has been sufficiently ventilated before entering.

Flammability

Flammability refers to the ease with which an explosive or blasting agent can be ignited by heat. As you might suspect, most dynamites are easy to ignite and burn violently. If the burning takes place in a confined space the burning may transform into a detonation. Water gels and emulsions are more difficult to ignite than dynamite; however, after most of their water is evaporated by a heat source they can support combustion without confinement. Of the most common commercial explosives, ammonium nitrate products, emulsions and water gels have a lower tendency than dynamite to convert burning into a detonation.

Explosive Classification

The U.S. Dept. of Transportation (DOT) uses the United Nations explosives shipping classification system. This system is based on hazard in shipping only, versus the previous DOT system that considered both shipping and use hazards.

Division 1.1 explosives (with a mass explosion hazard): This class exhibits the maximum hazard potential and will affect the entire load almost instantaneously. Examples include such products as dynamite, black powder, certain watergels/slurries, certain blasting caps, electric and non-electric detonators, detonating cord, MS connectors, primers, boosters, etc. Other examples include shaped charges, grenades, mines, and nitroglycerin desensitized.

Division 1.2 explosives (with a projection hazard): This class exhibits a projection hazard but not a mass explosive hazard. Examples include rocket propellants, certain fireworks, aerial and surface flares.

Division 1.3 explosives (with predominantly a fire hazard): This class possesses a flammable hazard, and includes smokeless powder, fireworks (display), tracers for ammunition, projectiles.

Division 1.4 (minor explosion hazard): This class exhibits a minor explosion hazard with the explosive effects this material largely confined to the package and no projection of fragments of any appreciable size or range expected. Examples include some types of blasting caps and detonating cord, consumer fireworks, small arms ammunition.

Division 1.5 (very insensitive explosives): This class has a mass explosive hazard, but it is represented by a low probability of transition from burning to detonation while in normal transportation. Examples include primarily blasting agents, such as ANFO, and low sensitivity water gels.

Division 1.6 (extremely insensitive explosives, no mass explosions): This class contains only extremely insensitive detonating substances that demonstrate a negligible probability of accident initiation or propagation.

Explosive Products

Dynamite

Dynamite has been a mainstay of the commercial explosives industry, ever since Alfred Nobel learned that nitroglycerin absorbed into diatomaceous earth was safer to transport, and use. Most modern dynamites contain nitroglycerin as a sensitizer, or as the principal means for developing energy. Where field conditions permit, ANFO and emulsions have replaced dynamite as lower cost alternatives. Dynamites are packed into cylindrical cartridges ¾-inch diameter or larger, and ranging from 4 inches to 24 inches in length.

The three basic types of dynamite are: granular, semi-gelatin, and gelatin. The semi-gelatin and gelatin dynamites contain nitrocotton, a cellulose nitrate that combines with nitroglycerin to form a cohesive gel, in relatively high percentages. Dynamites also differ in the principal materials used to provide their energy. In 'straight' dynamites nitroglycerin is the principal energy source, in 'ammonia', or so-called 'extra', dynamites ammonium nitrate replaces a large portion of the nitroglycerin to create less expensive and more impact resistant dynamite. In these dynamites the ammonium nitrate is the principal source of energy, and the nitroglycerin acts as a sensitizer.

The nitroglycerin in dynamite can be inhaled, or absorbed through the skin. It acts as a blood vessel dilator, reducing the amount of blood flow to the brain, and causing headaches that are sometimes severe.

ANFO – Blasting Prills

Ammonium nitrate is an essential ingredient in nearly all commercial explosives. Predominantly it is used in the form of a small porous pellet called a prill, and mixed with fuel oil. Approximately four billion pounds of ANFO (ammonium nitrate-fuel oil) is consumed in the U.S. annually accounting for nearly 80% of the domestic commercial explosives market. The main limitations of ANFO are no water resistance, and low product density. ANFO in its most commonly used formulation consists of 94% ammonium nitrate prills, and 6% No. 2 diesel fuel. Although ammonium nitrate prills are extensively used as agricultural fertilizers they differ from explosive grade prills, as they are denser and less porous. The detonation velocity of ANFO is largely dependent on the size of the borehole and degree of confinement. DV may reach nearly 16,000 fps under optimum conditions. Most ANFO has a poured density of 0.77 to 0.85 g/cc with a practical maximum density of about 1.10 g/cc. ANFO is not cap sensitive, and must be primed to achieve maximum DV. When priming ANFO, the highest detonation pressure material available should be used thus assuring the ANFO reaches its steady state velocity within a minimum distance from the point of initiation. Efficient primers for ANFO have diameters that approach the diameter of the borehole, especially in holes less than five inches in size. ANFO has no water resistance, and therefore should never be loaded unprotected into boreholes containing water. ANFO may be loaded bulk, may be packaged in bags, or may be packaged for loading in cylindrical textile, or cardboard, tubes with plastic liners.

Emulsions

Emulsion explosives are the combination of two immiscible (incapable of mixing) liquids in which one phase is uniformly dispersed throughout the other. They are dispersions of water solutions of oxidizers in an oil medium, or water-in-oil emulsions. The unique structure provides a high ratio of oxidizer to fuel, and gives the emulsion its unique characteristics. The fuel phase of an emulsion is typically oil or wax, or a combination of the two. No. 2 fuel oil is common to many emulsions. The oxidizer solution phase consists of microscopically fine droplets that are surrounded by the fuel phase. The oxidizer solution always contains ammonium nitrate, and may also contain sodium nitrate, calcium nitrate, and ammonium or sodium perchlorate. The oxidizer remains dispersed in the fuel to form a stable emulsion through the addition of a surfactant or emulsifying agent. The ratio of oxidizer to fuel in an emulsion is typically 9:1. In some cases aluminum, or ANFO, is added to an emulsion to increase the energy of the explosive. Emulsions have been found to be very safe explosives to handle, and use, and have failed to detonate in impact and friction tests standard to the industry. Emulsions will normally not detonate during burning, but there is no guarantee of this, especially if the emulsion has become contaminated with other materials. Although emulsions express a great degree of safety they will detonate if exposed to severe conditions, and should never be abused. Emulsions may be formulated as cap sensitive or insensitive explosives.

Blends

Generally, a blend is a mixture of a water-in-oil emulsion and ANFO. They are typically not sensitive to initiation by means of a blasting cap, and are classified as blasting agents. There are three main purposes for blends. They are: 1) to increase the density of ANFO, thereby increasing energy in the borehole; 2) to provide water resistance to ANFO; and 3) to reduce mining costs. Blends containing less than 50% emulsion are sometimes called ‘heavy ANFO’. Some formulations of blends may reach detonation velocities in excess of 18,000 fps. Blending of the products allows a wide range of detonation velocities, and densities for the explosive user. Once the mixture reaches a ratio of 40:60 (emulsion:ANFO) the mixture is essentially waterproof. At a ratio of 60:40, the mixture may be pumped.

Boosters/Primers

A booster is an explosive used to perpetuate or intensify an explosive reaction. A booster is often, but not always, cap sensitive and <u>does not contain an initiating device</u>. The terms primer and booster are often used interchangeably, but the two serve very different functions. A primer is used to initiate an explosive reaction, and contains a detonator, detonating cord, etc., whereas a booster does not contain a detonator. Dynamite and emulsions are all sometimes used as boosters for ANFO products. Many cast boosters are also used as primers, and are molded with a cap well in the booster so that insertion of a detonator is made easier. Other types of cap sensitive explosives may also be used to make primers.

The popularity of ANFO created the need for the development of high-velocity and high-energy boosters. Compact, high detonation pressure, non-nitroglycerin boosters have been developed to meet this need. Even though these boosters are more resistant to accidental detonation from impact, shock, or friction than dynamite they must be handled safely.

Cast boosters are cap sensitive explosives that typically contain the high explosive trinitrotoluene (TNT) as the casting material. Other explosive materials may be mixed into the melted TNT, and will impart different energy and/or sensitivity to the booster. Some types of cast boosters are pentolite boosters, composition B boosters, torpex boosters, and amatol/sodatol boosters. The density of cast boosters ranges from 1.55-1.7 g/cc, and they have excellent water resistance. They detonate at velocities of 20,000-25,000 fps, or more.

In addition to the cast boosters, nitroglycerin explosive boosters are still commonly used. These are usually found in stick, or cylindrical form. Ammonium nitrate gelatins (so-called 'extra' gelatins) are the most popular of this type.

An accepted rule-of-thumb for efficient priming is to use the largest diameter primer that will fit the borehole. The primer is usually located at, or near, the bottom of the borehole. Bottom initiation serves to maximize confinement of the charge, and tends to produce less flyrock and airblast than top initiated holes. Multiple primers may be used in single boreholes to ensure detonation of the entire explosive column, and to initiate separate, decked, explosive charges. Primers should never be made up until immediately prior to insertion into the borehole, and primer components should be kept physically separated until that time. When cartridge explosives are used as primers it may be necessary to make a hole in the explosive in order to seat the detonator. Only non-sparking implements (i.e. powder punch) should be used for this purpose. The detonator should always be completely seated within the explosive cartridge. Since detonators fire directionally they should be oriented toward the center of the cartridge (see Diagram 3-1 for examples of primers).

Diagram 3-1.Primers

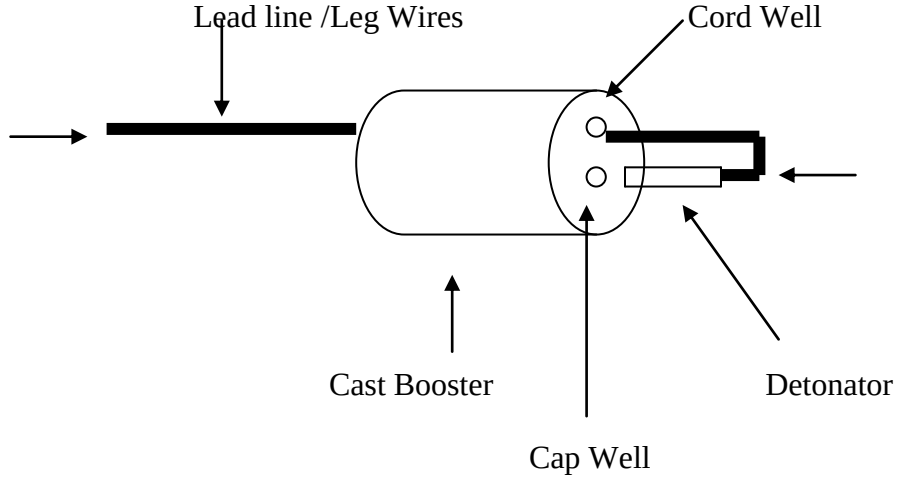

Initiating Devices

Only by the careful choice, and utilization, of the proper initiating device can blasters achieve the most effective use of explosives. Blasters must always remember that all initiating devices are designed to explode, and must be handled with the same care as high explosives. Depending on the prime source of energy, initiating devices fall into three basic types: electric, electronic, and non-electric. Blasting caps may be instantaneous, or delayed in milliseconds

(1/1000th of a second). To constitute separate detonations a delay must be at least 8 ms (milliseconds), however, most detonators are delayed in intervals of 25 ms.

Electric Detonators

Electric detonator systems have been in use in the mining industry for many decades. Electric detonators come in several types with the most common being the low firing –current variety. An electric detonator consists of two leg wires embedded in a metal shell containing a high explosive base charge that is designed to initiate other explosives. Above the base charge is a primary charge designed to convert the burning reaction transmitted from the ignition source into a detonation. Above the primary charge, in delay detonators, is a pyrotechnic charge, which burns at a known rate. At the top of the detonator is the bridge wire that receives the electric current from the leg wires, which protrude from the cap. The bridge wire is encased in an ignition mixture. Internal safeguards are built into all modern commercial detonators in order to prevent electrostatic energy from accidentally initiating the detonator. Electric detonators, which contain no pyrotechnic delay charge, are considered instantaneous detonators. The burning time of any delay charge determines the millisecond delay period of the cap.

Detonator leg wires may be made of copper, iron, or copper clad iron and come in a variety of gauges and lengths. Electric detonators produced in North America have shunts on the free ends of the leg wires to prevent current from unintentionally flowing through the bridge wire. Internal construction of electric detonators varies with different manufacturers, therefore, electric detonators from different manufacturers must never be used in the same blast. Such a practice is almost certain to result in dangerous misfires.

In a cast booster the lead lines/leg wires are fed through the booster, and the detonator is then inserted into the cap well so that the detonation is directed into the explosive.

When making a primer using slurry or cartridge explosives, it may be necessary to make a hole in the explosive cartridge with a non-sparking implement. The lead line/leg wires may then be half-hitched around the cartridge, or taped to the cartridge. The detonator must be seated completely within the explosive.

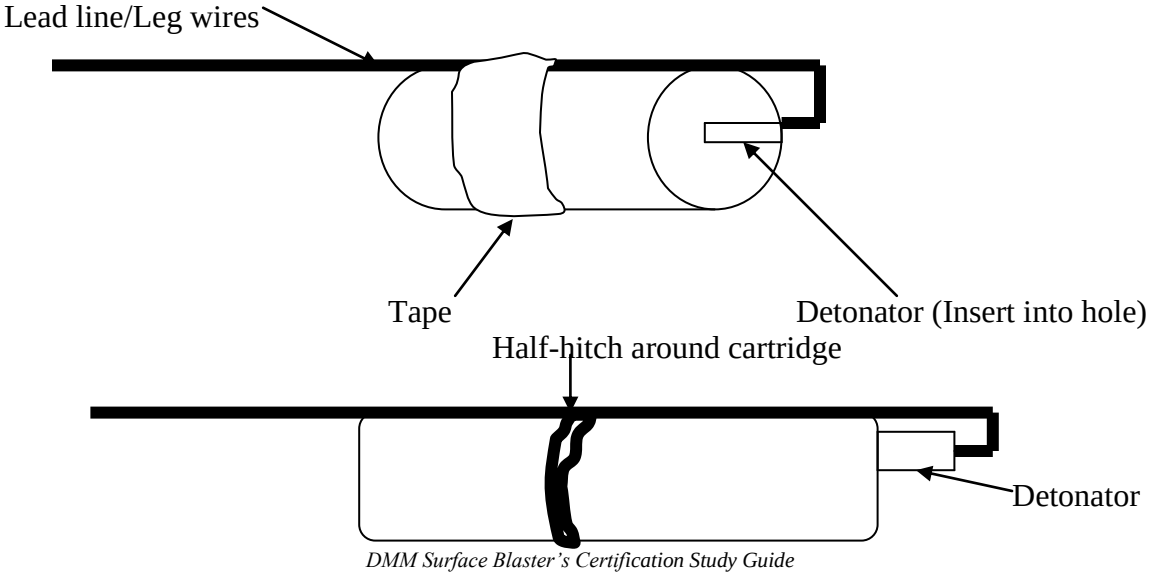

Proper electric blasting will allow for the safe firing of large numbers of detonators from a safe, remote location. "Successful electric blasting depends on four basic principles: 1) proper selection and layout of the blasting circuit; 2) an adequate energy source compatible with the type of circuit selected; 3) recognition and elimination of all electrical hazards; and 4) circuit balancing, good electrical connections, and careful circuit testing."[4] The type of circuit will depend to a great extent on the number of detonators to be fired, and the type of operation.

Generally, a single series is used on shots containing 50 detonators or less.[4] For delivering the electrical energy to the circuit a capacitor discharge blasting machine offers the safest, most dependable, and economical source.

Prior to loading any electrically detonated blast all electrical hazards must be eliminated. Such hazards are lightning, stray current, radio frequency energy from transmitters, induced currents from high voltage power lines, and static electricity.

Once loading begins, the connections between leg wires, connecting wires, and lead lines must be tight, clean, and insulated from the ground. Also, the circuit resistance of all circuits should be calculated and tested. The resistance of each detonator should be tested prior to loading of the explosive charge, and the ends of leg wires, connecting wires, and lead lines should be kept shunted.

When testing electric blasting circuits a Blaster's Multimeter or Blasting Ohmmeter (Blasting Galvanometer) must be used. Use of any other instrument may result in enough current to cause a partial or total detonation.

Two basic types of electric blasting circuits will be discussed in this guide: single series and series-in-parallel (See Diagram 3-2). A single series circuit provides a single path for the current through all the detonators. It is usually limited to small blasts containing 50 detonators, or less. A series-in-parallel circuit is the most common type of electrical blasting circuit. In this type of circuit the ends of two, or more, single series circuits are connected together, and are then connected to the firing line. The main advantage of the series-in-parallel hook-up is that a large number of detonators can be initiated without a large increase in voltage requirements.

In order to test a blasting circuit it is first necessary to calculate the theoretical circuit resistance. Methods of calculating the resistance of single series, and series-in-parallel, circuits is as follows:

Single series – The total resistance of a single series circuit is the number of detonators times the resistance of one detonator (See Table 3-1) plus the resistance of any connecting wire and firing line.

Circuit Resistance = (No. of detonators x resistance of one detonator) + resistance of connecting wire + resistance of firing line. The resistance of wire is calculated by taking the resistance of 1000 feet of the appropriate gauge wire from a chart (See Table 3-2), multiplying the figure by the total number feet of that gauge wire used in the circuit, and then dividing by 1000.

[4] ISEE Blaster's Handbook, 17th Edition, Chapter 6, Electric Firing Techniques, pg. 179.

$$\text{Resistance of wire} = \frac{\text{total length of wire x resistance of 1000' of wire}}{1000}$$

Resistance figures are calculated, and measured, in Ohms.

Example: Calculate the total circuit resistance of a single series containing 20 detonators, with a resistance of 2.1 ohms each, 200' of 16-gauge connecting wire, and 1000' of 14-gauge firing line.

Cap resistance = 20 x 2.1 ohms = 42 ohms

$$\text{Connecting wire resistance} = \frac{200 \times 4.02}{1000} = 0.804 \text{ ohms}$$

$$\text{Firing line resistance} = \frac{1000 \times 2.53}{1000} = 2.53 \text{ ohms}$$

Total circuit resistance = 42 (detonators) + 0.8 (connecting wire) + 2.53 (firing lines)
= 45.33 ohms

When tested the circuit should read between 45 and 46 ohms. If the reading is too low some detonators may not be connected in the circuit. If the reading is too high, it indicates that there are too many detonators in the series, or the connections are loose or dirty.

Series-in-Parallel – It is important to remember in series-in-parallel circuits that the resistance of all the series in the circuit should be balanced. Balancing the series is usually done by wiring the same number of detonators in each series. In order to determine the resistance of a balanced series-in-parallel circuit the resistance of one series, in the circuit, is divided by the total number of series in the circuit.

$$\text{Detonator circuit resistance} = \frac{\text{Resistance of one series}}{\text{Total number of series in the circuit}}$$

Example: Calculate the total resistance of a series-in-parallel circuit containing 5 series of 10 detonators each. The resistance of a single detonator is 2.32 ohms.

Resistance of one series = 10(detonators) x 2.32 ohms
= 23.2 ohms

Number of series in the circuit = 5

$$\text{Total resistance of the detonator circuit} = \frac{23.2}{5}$$
= 4.64 ohms

Diagram 3-2. Wiring Configurations

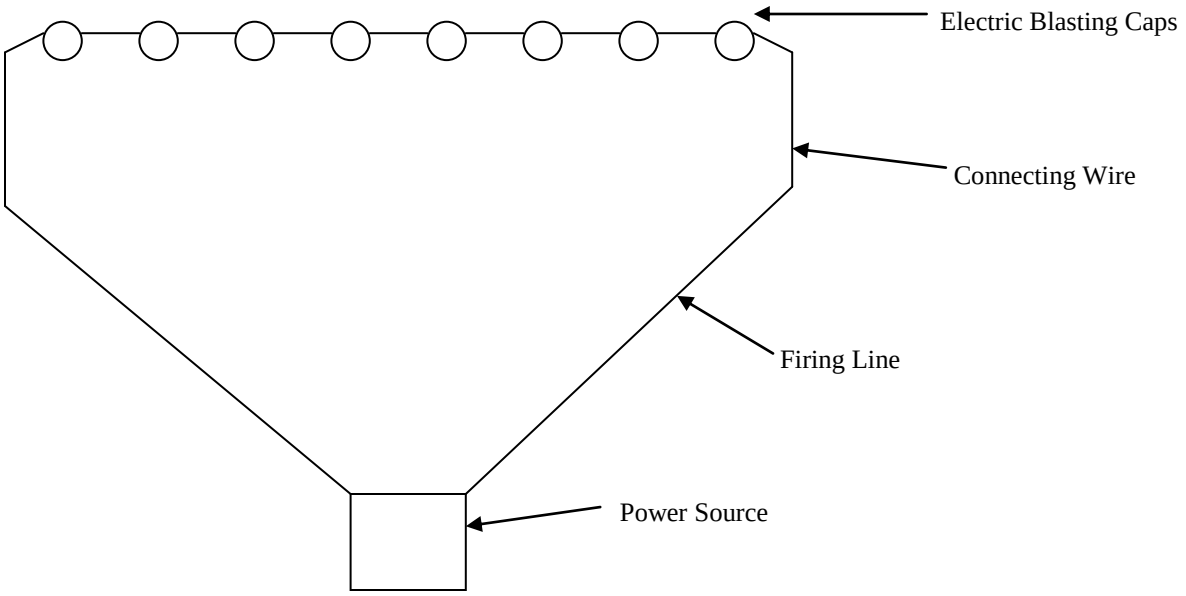

A. Single Series Circuit

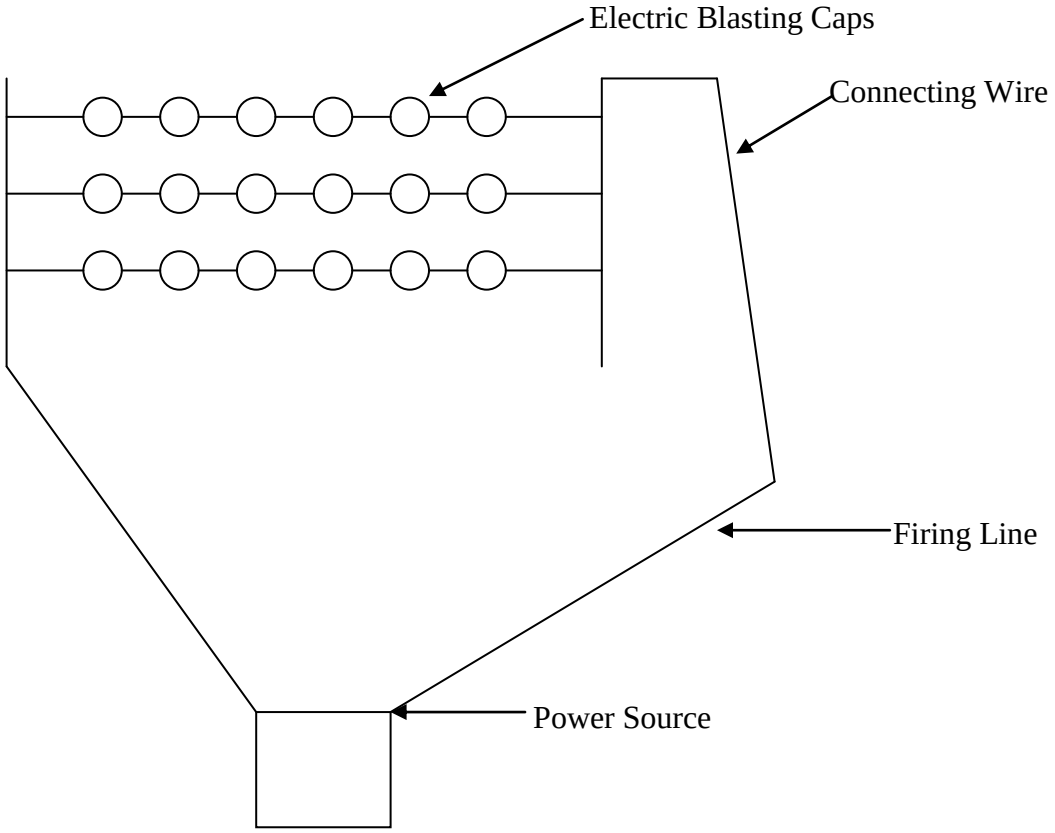

B. Series-in-Parallel Circuit

Table 3-1.[5] Nominal Resistance* of Electric Blasting Detonators in Ohms per Detonator

(This is for sample calculations only: refer to your supplier for actual resistances of your products)

	Copper Wire		Iron Wire	
Length of Wire (Feet)	**Instantaneous Detonators**	**Delay Detonators**	**Instantaneous Detonators**	**Delay Detonators**
4	**1.26**	**1.16**	**2.10**	**2.00**
6	**1.34**	**1.24**	**2.59**	**2.49**
7	**-**	**-**	**2.84**	**-**
8	**1.42**	**1.32**	**3.09**	**2.99**
9	**-**	**-**	**3.34**	**-**
10	**1.50**	**1.40**	**3.59**	**3.49**
12	**1.58**	**1.48**	**4.09**	**3.99**
14	**1.67**	**1.57**	**4.58**	**4.48**
16	**1.75**	**1.65**	**5.08**	**4.98**
20	**1.91**	**1.81**	**6.06**	**5.98**
24	**2.07**	**1.97**		
30	**2.15**	**2.21**		
40	**2.31**	**2.06**		
50	**2.42**	**2.32**		
60	**2.69**	**2.59**		
80	**2.71**	**2.61**		
100	**3.11**	**3.01**		

*At 68° Fahrenheit.

Table 3-2.[6] Resistance* of Copper Wire

AWG Gauge No.	Ohms per 1,000 feet
6	**0.395**
8	**0.628**
10	**0.999**
12	**1.588**
14	**2.525**
16	**4.02**
18	**6.39**
20	**10.15**
22	**16.14**

*At 68° Fahrenheit.

[5] ISEE Blaster's Handbook, 17th Edition, Chapter 16, Electric Firing Techniques, pg. 185
[6] ISEE Blaster's Handbook, 17th Edition, Chapter 16, Electric Firing Techniques, pg. 186

The resistance of the entire blasting circuit would be found in the same way as it was done in the previous example for a single series. The resistance of the detonator circuit would be added to the resistance of any connecting wire and the firing lines.

In order to find the current in any electrical circuit we can use Ohm's law. It states that the current flowing in a circuit is equal to the voltage divided by the resistance.

$$I = \frac{V}{R}$$

Where: I = current in amperes
V= applied voltage in volts
R= resistance in ohms

It is important to remember that the nominal/minimal firing current for each series, in a series-in-parallel hook-up, of blasting caps is 1.5-2.0 amperes depending on the manufacturer. If mixed series of instantaneous and delay detonators are used in a circuit, a current of 2.0 amperes should be used due to the fast functioning of the instantaneous caps.

Current leakage is another problem that can cause misfires when using electric detonators if it is undetected. Current leakage is the loss of a portion of the firing current through the ground, therefore bypassing the firing circuit. The leakage can be caused by the detonator leg wires being damaged during loading, the wire connections coming in contact with the ground, or improper splices in the boreholes. Current leakage can be detected by the use of a Blaster's Multimeter or Blasting Galvanometer. The conductivity of the rock is the principal factor in the amount of current leakage that can occur.

Capacitor discharge blasting machines, when used properly, are the most dependable method of detonating electric blasting caps.

Capacitor discharge blasting machines are most commonly used for detonating electric blasts, but in order to determine if sufficient current is being delivered to the entire shot the blaster must consider the rapid current decay associated with the machine. Charts have been developed for use with individual blasting machines to show the number of detonators, and number of series, that the machine will safely detonate. Blasters must consult the appropriate chart for their machine to ensure it will deliver sufficient energy to detonate their planned blast.

The above information is provided for review only. It is not intended to be sufficient information to design a blast. Additional training, charts, and other information are required for each blast design. The information in this section is taken from the 17th edition of the ISEE Blaster's Handbook.

Electronic Detonators

(The information provided below is excerpted, in part, from MSHA Technical Support, Approval and Certification Center report PAR 0095053 A10 dated March 2008)

Electronic detonator systems are new and continually advancing technology for the initiation of blasts in mining operations. Potential advantages for using electronic detonators are precise timing, reduced vibrations, a reduced sensitivity to stray electrical currents and radio

frequencies, and a reduction in misfires through more precise circuit testing. Electronic blasting systems typically permit blasting with detonator delay times having millisecond or better accuracy.

Electronic detonators have been designed to eliminate the pyrotechnic fuse train that is a component of electric detonators, which improves timing accuracy and safety. For electronic detonators, typically an integrated circuit and a capacitor system internal to each detonator separate the leg wires from the base charge. Depending on the design features of the electronic detonator, the safety and timing accuracy can be greatly improved. The electronic detonator is a more complex design compared to a conventional electric detonator. A specially designed blast controller unique to each manufactured system transmits a selectable digital signal to each wired electronic detonator. The signal is identified by each electronic detonator and the detonation firing sequence is accurately assigned. The manufacturer's control unit will show any incomplete circuits during hookup prior to initiation of the explosive round. The wired round won't fire until all detonators in the circuit are properly accounted for with respect to the current blasting plan layout.

Using electronic detonators as designed and recommended by the manufacturer require specialized devices to identify, program and arm the blasting circuit. The detonators, connecting wires and accompanying items such as taggers, loggers, circuit testers and blast controllers are typically referred to as electronic blasting systems or electronic initiation systems. Because of the unique design and construction of electronic blasting systems, each must be used according to the manufacturer's instructions.

Electronic initiation systems (electronic detonators) cannot be initiated by a conventional blasting unit, nor can it be activated without entering proper security codes. However, electronic detonators are still susceptible to initiation by lightning, fire, and impact of sufficient strength. Therefore, they must be properly transported, stored and handled as an explosive product.

Safety and Health Regulation 4 VAC 25-40-925 requires that electronic detonation systems be approved by the Division of Mineral Mining Director as providing performance equivalent to that required in 4 VAC 25-40-920 (electric detonators), and that they be used in accordance with the manufacturer's instructions.

There are currently 5 electronic blasting systems that are approved by DMM for use at Virginia mineral mine sites. These include:

- Austin E-Star System.
- Daveytronic Digital Blasting System.
- Orica I-KON Digital Energy Controlled System.
- Dyno Nobel Hot Shot & Digishot Systems.
- Orica Uni tronic Electronic Blasting System.

Non-electric Detonators

There are two main types of non-electric detonation systems in use in North America today, shock tube and detonating cord. The main advantage of non-electric systems is perceived to be their lack of susceptibility to initiation from extraneous electrical energy. The shortcoming of most non-electric systems is that they cannot be tested to ensure a complete circuit exists prior to detonation.

First, we will discuss detonating cord systems. Detonating cord is a flexible cord containing a core of high explosives. The cord detonates at a velocity of approximately 22,000-fps. Different sizes of detonating cord are usually expressed as grains of explosive per linear foot of cord. The core of detonating cord is usually composed of PETN, and is covered with various combinations of materials. The cords are generally color coded by each manufacturer to identify the product grade. Detonating cord, although classified as a high explosive, is relatively insensitive, and requires close contact with at least a No. 6 detonator to assure initiation. Depending on the core load, and type of explosives, detonating cord **may** propagate through knots and splices. Most cords with at least 20 grains/ft of explosive will propagate through splices. The manufacturer's recommendations should be consulted, and followed, for each specific cord. When used down boreholes, exploding detonating cord will cause the compression of the explosive column surrounding the cord. This is a concern with explosives that have a critical density range in which they will detonate, such as ANFO in small diameter holes. Where compatible, detonating cord may also be used in conjunction with shock tube initiation systems.

One of the concerns with using detonating cord is the amount of noise generated when the cord explodes. Because of the noise, any cord greater than 3 grains/ft must be covered with at least 6 inches of loose earth when being used within 800 ft. of an inhabited building. Also, to ensure complete detonation, a double trunk line or loop system must be used to connect holes in the blast. Other specific regulations for the use of non-electric detonating systems can be found in 4 VAC 25-40-930 of the Safety and Health Regulations for Mineral Mining.

Detonating cords with low core loads of 2.4-4.0 grains/ft are considered low energy cords. These cords transmit their explosive energy to an attached detonator. They are somewhat similar in appearance to shock tube systems, and are attractive in situations where it is important for the cord to self-destruct. By doing so, they leave no contamination in the product being mined.

Surface delay systems are available for both types of detonating cord, therefore, allowing flexibility in blast delay patterns. Detonating cord should always be cut with a knife, and not with pliers, wire strippers, or scissors, due to the hazard of metal-to-metal contact.

The second type of non-electric detonation system is the shock tube. The system utilizes a dust explosion in an almost empty tube to transmit the initiation signal. The tube is coated on the inside with a fine layer of HMX high explosive, combined with aluminum. The explosive is held on the tube wall by a static charge. When sufficient shock and ignition is delivered to the tube the dust explodes and the detonation is propagated through the tube in a fashion similar to a coal dust explosion in an underground mine. The tubing is insensitive to ordinary heat or impact, and requires high impulse shock to be energized. The most common initiation devices

are mechanical devices, which utilize a shotgun shell primer activated by a firing pin. The reaction travels through the tube at a rate of approximately 6,500-7,000 fps. When the explosive reaction reaches a detonator it initiates the functioning of the delay elements in the detonator. With the exception of the ignition area, the detonator is very similar to one detonated electrically. Surface delay connectors, and down hole delay detonators are available for these systems making them very flexible and adaptable. The shock tube itself is made of a durable, flexible plastic, however, any cut or damage to the tube that might allow moisture to enter the tube could result in a cutoff of the detonation signal. The following is a list of precautions particular to the use of nonelectric shock tube detonating systems:

- Always store, handle, transport, and use all explosive products, including nonelectric systems, in accordance with the manufacturer's instructions.
- Only properly trained personnel should use nonelectric detonating systems.
- Always avoid situations where shock tube could become entangled, or entwined, with vehicles, machinery, or equipment.
- Protect the components of shock tube systems from unintended energy, such as, any source of heat, electricity, or impact.
- Always follow the manufacturers' recommendations when cutting and splicing lead-in trunkline shock tube.
- Never remove, or crimp, a detonator on shock tube.
- Never allow water, or moisture to enter a shock tube.
- Never hold shock tube in your hand while detonating, as the tube may rupture.
- Do not mishandle, or abuse shock tubing.
- Do not kink, pull, stretch, or put undue tension on shock tube.
- Never attempt to disassemble a surface delay detonator from the connector block.
- Never abuse shock tube by driving vehicles, or equipment, over it.
- Never attach the shock tube lead line to the initiating device until the blast area has been cleared.
- Since shock tube systems can only be checked visually, the blaster must use a systematic and orderly method of inspecting the hookup. Preferably, the visual inspection should be done twice to ensure proper connections of all tubing in the blast.

Non-electric systems vary from manufacturer to manufacturer; therefore always consult the manufacturer's recommendations for the product being used. Never mix systems from different manufacturers in the same blast unless specifically approved by the manufacturers.

Black Powder

The modern commercial explosives industry has its roots in the development of black powder. The main ingredient of black powder was initially potassium nitrate (saltpeter), and is thought to have been used by the Chinese as early as the 10th century. Later explosive manufacturers were able to substitute sodium nitrate for the more costly potassium nitrate. Annual consumption of black powder in the U.S. is less than 100,000 pounds. Black powder forms the powder train in safety fuse, and has historically been used in the dimension stone industry in Virginia. In order for an operator to use safety fuse, or black powder, in Virginia they must first receive special approval from the DMM (**4 VAC 25-40-800.C.**). The approval would specify restrictions for handling, transportation, and storage of the materials.

BLASTING INSTRUMENTS

Testing Equipment

Blasting Galvanometer

A blasting galvanometer is an electrical resistance instrument designed specifically for testing electric detonators and circuits containing them. It is used to check electrical continuity. Other acceptable instruments for this purpose are blaster's multimeters and blasting ohmmeters.

Blaster's Multimeter

"The blaster's multimeter is a compact volt-ohm-millivolt meter specifically designed to measure resistance, voltage, and current in blasting operations."[7] In all cases, instruments used to test blasting circuits should include the word *blaster's or blasting* in the name**. Standard electrical test meters must never be used to test blast circuits as they may deliver sufficient current to detonate all, or part, of a blast.** The blaster's multimeter can be used to: 1) measure the resistance of a single blasting circuit for continuity, and the total resistance in a series-in-parallel circuit; 2) survey blast sites to determine if extraneous current hazards exist; 3) measure a wide range of resistances necessary to investigate static electricity hazards, and; 4) measure power line voltages up to 1500 volts AC and DC.

[7] ISEE Blaster's Handbook, 17th Edition, Chapter 33, Blasting Equipment and Accessories, pg. 539

Blasting Ohmmeter

The blasting ohmmeter is a digital or analog ('swing needle') device used to measure the resistance in ohms of a blasting circuit. The measurement is useful for:

- determining if the bridgewire of an individual detonator is intact
- determining the continuity of an electric detonator series circuit, and
- locating broken wires and connections in a series, or series-in-parallel circuit.

If the special silver chloride battery in the blaster's ohmmeter is depleted it must be replaced with an identical battery. Never replace it with a standard battery.

Blasting Machines (for electric detonator systems)

The two basic types of blasting machines are: 1) generator; and 2) capacitor discharge (CD).

The generator type machine uses a small hand driven generator to produce a direct current pulse that energizes the electric detonators. The energy is generated by the twist of a handle, squeeze of a lever, or pushing down of a handle. The generator type machines are usually rated by the number of instantaneous, or delay, caps that they will successfully fire in a straight series. Under certain conditions these type machines may be used to detonate series-in-parallel circuits, but should never be used for straight parallel circuits.

CD blasting machines have a capacitor, or bank of capacitors that store a large quantity of electrical energy. The energy may be supplied by a high voltage battery, or by a high voltage oscillator from a low voltage battery. The blaster discharges the energy into the blasting circuit by activating a firing switch. The discharge of energy occurs in milliseconds. CD blasting machines will discharge many electric detonators in relation to their weight and size, and are a

reliable means of firing electric blasting circuits. The machines are rated in terms of voltage and energy, and blasters must consult the manufacturer's specifications to determine if the machine is sufficient for their application. The machines should always be used in accordance with the manufacturer's recommendations. **Persons using capacitor discharge blasting machines must be aware that the discharge from the machine can be lethal.** Blasting machines should be tested frequently by an approved tester, to ensure that the machine delivers its full output of energy.

Several CD blasting machines combined into a single unit is called a sequential timer. The timer is programmed so that it energizes multiple electric detonator circuits in a time delay sequence. The units provide blasters with a number of delays greater than those available when using electric detonators with a conventional blasting machine. They are especially useful where it is necessary to limit the amount of explosives per delay in order to control noise and vibration.

Blasting Seismographs

A blasting seismograph is used to monitor, record, analyze, display, and print ground vibration and noise from a blast. It is used to measure the transfer of seismic wave energy from one point to another. Standard seismographs utilize four channels for signals from four sensors; three for ground motion and one for sound (air pressure). The data from blast events are shown as peak measurements of ground motion and air overpressure (also referred to as air blast). Ground sensors are contained in a geophone, which is placed in direct contact with the earth, and air overpressure is monitored through a microphone. Typical data registered are peak particle velocity (the speed at which a particle moves per unit of time), peak displacement (the distance particles are moved by the seismic wave), peak acceleration (rate of change in velocity per unit of time), and the frequency of movement (the number of cycles per second (hertz) that the particles vibrate). Air overpressure is a temporary pressure pulse above the atmospheric pressure level. Air overpressure is measured in pounds per square inch, and converted into decibels (dB).

Two examples of seismographs are shown on the next page.

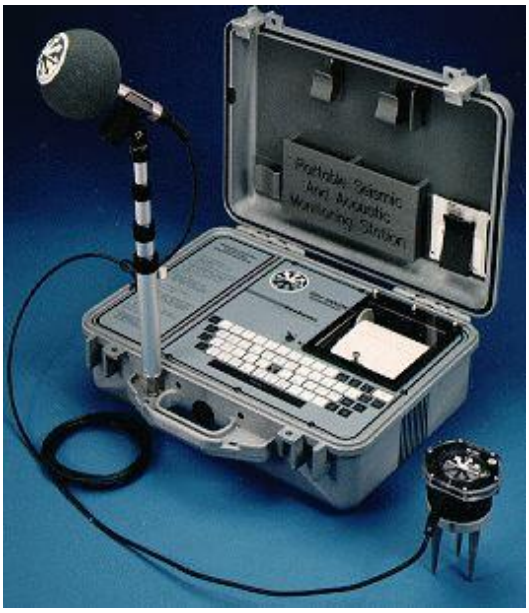
Portable Seismic
And Acoustic
Monitoring Station

SECTION 4

BLASTING DESIGN / CONTROL

This page intentionally left blank.

SECTION 4 – BLASTING DESIGN/CONTROL

- Drilling
- Selection of Hole Diameter
    - Required Production
    - Terrain
    - Material Characteristics
    - Type and Size of Excavating and Hauling Equipment
    - Proximity to Vibration-Sensitive Areas
    - Bench or Lift Height
    - Explosives Type and Size
- Burden and Spacing
- Stemming
- Timing/Delays
- Scaled Distance
- Weather and Atmospheric Conditions
- Time of Day

BLASTING DESIGN/CONTROL

Drilling

In the surface drilling and blasting profession the **most critical part** is often the drilling portion. A blasthole is a cylinder whose prime purpose is to accommodate an explosive charge.

A drill log/report is the best way for a driller to communicate the condition of the blastholes to the certified blaster in charge of the blasting operation. **4 VAC 25-40-1095 requires** the driller to produce a drill log as each hole is being drilled. The certified blaster in charge **must review** the drill logs to determine specific downhole conditions prior to loading a shot (**4 VAC 25-40-800.H.**).

The drill log/report must include, at a minimum, the following information per **4 VAC 25-40-1095**:

1. the name of the driller.
2. borehole diameter.
3. borehole depth.
4. depth of broken material at the collar.
5. other geological conditions encountered (and the depth at which they are encountered) during drilling such as cracks, seams, voids, mud, or any other anomalies that could affect the blast.

The drill log should also:

- identify the borehole in the drill pattern,
- indicate the amount of overburden (loose, unconsolidated material lying above the rock being blasted),
- note the presence of water and at what depth it is located, and
- note whether subdrilling was done and how much.

A signed copy of the drill log must be provided to the mine operator and certified blaster in charge, and a copy included in the blast record (**4 VAC 25-40-1095**).

It is important that mine operators convey information related to their mine development plan to the drillers and blasters who will ultimately implement critical parts of the plan. The certified blaster in charge is responsible for designing a shot that meets the expectations of the mine operator, and complies with requirements of State and Federal mine law and regulations.

Selection of Hole Diameter

In order to determine the appropriate hole size, or diameter, several important factors must be considered. We must also keep in mind that the most appropriate hole size may change over the life of the mining operation. It is generally accepted that the larger the blast

hole the less expensive the drilling cost, as long as the hole size remains appropriate for the operation. Some other factors to be considered are:

- Required Production
- Terrain
- Material Characteristics/Geology
- Type and Size of Excavating and Hauling Equipment
- Proximity to Vibration-Sensitive Areas
- Bench or Lift Height
- Explosives Type and Size

The capital investment available for initial startup is also a consideration. Of the factors listed above, geology is probably the primary factor, as it is the one thing that cannot be altered. In hard, massive formations the distribution of explosives throughout the blast area is critical. Smaller holes, or a closer spacing, will result in finer fragmentation than larger holes on a wider spacing.

Required Production

Present and future production needs must be considered, as it will affect the type and number of drilling units required. However, production needs must be balanced against other considerations in order to come up with an appropriate hole size.

Terrain

In most cases, the larger the drill, the more limited it is in its ability to traverse rough terrain, and work in tight areas. For initial mine development, a smaller drill might prove more versatile than a larger unit, which might be more suitable to an established mine with a series of developed drill benches.

Material Characteristics/Geology

Some of the characteristics of the rock, or ore, that lend them to drillability and fragmentation, and that will also influence hole size are:

- **Hardness or compressive strength of the rock.** Percussive drilling is less affected by rock hardness than is rotary drilling. Hardness also relates to fragmentation, which can affect hole sizes in relation to explosive distribution.

- **Rock Structure.** The geology of the rock to be blasted also can affect selection of hole size. The existence of joints, fractures, folds, bedding planes and faults, as well as, the existence of cap rock will affect drilling operations. All the above factors influence fragmentation, back break, and stability of formations, which in turn affect economic efficiency of the drilling and blasting operation.

Type and Size of Excavating and Hauling Equipment

It is often thought that because large excavators and haulage equipment are used, blastholes will need to be as large as possible and the drill patterns spread in order to handle larger size blasted rock. To a degree this is correct, but it is important to keep in mind that the main purpose in using the larger excavation and haulage equipment is to promote higher levels of production more economically, not to cut costs on drilling and blasting. Thus, caution needs to be applied when making determinations of blasthole size based solely on the scale of excavation, haulage, and crushing equipment used. However, if the equipment used is relatively small in scale, careful assessment of the hole size, as it relates to the fragmentation desired, must be made.

Proximity to Vibration-Sensitive Areas

The majority of operators who utilize blasting and drilling techniques are very aware of restrictions placed on vibration, especially as it may relate to potential lawsuits. Larger holes contain more explosives per foot of hole, and unless decked, they will have higher charge weights per delay resulting in higher vibrations. In a new operation, some research and testing on hole size is advisable.

Bench or Lift Height

If benches have a fixed height, then blasthole size must be determined accordingly. Legislation dictates maximum bench height in certain areas, so some of the blasthole size selection process is eliminated. When bench height varies, there is much more latitude on hole size decisions; but in many cases bench or bank height is pre-set by production requirements and the size and type of equipment used.

Evaluation in determining bench or lift height should include:

1. The depth of the hole may be limited by the blow energy of the drill.

2. Steady State Velocity (The characteristic velocity at which a specific explosive at a given charge diameter will detonate).

3. The deeper the hole, the higher the percentage of explosives can be placed in the hole.

It is necessary to stay down a certain depth with the top of the explosive column in order to achieve desired results. To do this, the remaining depth of the hole must be filled with proper stemming. Since at detonation in an explosive column, energy is directed to the path of least resistance, it is generally necessary to “subdrill” or drill below the intended floor level. The path of least resistance, when properly designed stemmed, and subdrilled, should be the burden distance. Larger diameter holes are generally farther apart, so subdrilling is somewhat greater in order to break between the holes and avoid causing high bottom. The length of the explosive column is the bench height plus the subdrilling minus the stemming.

The relationship between hole diameter and bench height cannot be over emphasized. The use of a hole diameter that is too large for the respective bench height will result in poor explosive distribution. If stemming is decreased to allow the explosive column to reach farther up the blasthole, the possibility of flyrock and excessive noise increases.

Explosives Type and Size

The explosive type, size and method of loading should be a consideration in selecting drill hole diameter. The larger the column of explosive the more it will maintain it's Steady State Velocity. The larger blastholes will produce more tons/yards of material, which could show a cost saving per foot drilled. The blasthole diameter is an important part of the drilling and blasting operation, and will contribute to the cost and safety. In achieving the desired results the blasthole diameter may be changed several times during the life of the operation.

Burden and Spacing

Burden is the distance from the drill hole to the nearest free face or the distance between drill holes measured perpendicular to the spacing. Also, the total amount of material to be blasted by a given hole is usually measured in cubic yards or tons. A rule of thumb for burden is two times the drill hole diameter in inches equals the distance to the free face in feet.

Spacing is the distance between drill holes. In bench blasting, the distance is measured parallel to the free face and perpendicular to the burden. A rule of thumb for spacing is one and a half times the burden.

Drilling Patterns

There are many types of drill patterns. The most frequently used are square, rectangular, and staggered. The square pattern has equal burden and spacing. The holes in each row are aligned directly behind the holes in the row in front of it.

In the rectangular pattern, the burden is less than the spacing. The holes in each row are again aligned directly behind the holes in the row in front of it.

The staggered pattern may have equal burden and spacing. However, it is used more often with the burden less than the spacing. The holes in alternate rows are in the middle of the spacing of the row in front of it. The staggered pattern usually requires extra holes to achieve a uniform bank on each end of the blast.

Where a cap rock condition exists, "helper" or "satellite" holes may be added to any drill pattern. These are short holes drilled only to sufficient depth to go to the base of the hard capping layer. They are drilled in offset rows, equidistant from the nearest standard-depth holes. The powder load for these holes is typically limited in order to avoid flyrock problems.

Stemming

Stemming is defined as inert material placed in a borehole on top of or between separate charges of explosive material. It is used for the purpose of confining explosive materials or to separate charges of explosive material in the same borehole. A rule of thumb for stemming is it should equal burden.

If flyrock is encountered coming from the top of the blast or excessive air blast levels are recorded, the stemming should be increased. The size and type of stemming can also have an effect on the amount of stemming. In general the stemming amount should equal the burden of the blasthole. In cases of high hazard the stemming may need to be increased.

A rule of thumb for larger blastholes is to use stemming sized to $1/20^{th}$ of the hole diameter. The desire is to create a locking effect between the stemming and the side of the blasthole.

Drill cuttings should <u>not</u> be used as stemming as they may contain a large amount of fine material. In dry holes, drill cuttings will not lock with the wall. In wet holes, the cuttings may mix with water and create a high specific gravity mixture that may lift the explosive causing separation and decrease stemming length in the blasthole. This may cause flyrock, excessive air blast (air overpressure), leave undetonated explosives in the muck pile, or create poor fragmentation.

Timing/Delays

Millisecond (MS) delay blasting was introduced in open pit quarry blasting many years ago. Even when blasting to a free face, the rock movement time can be an important factor. This is particularly true in multiple row blasts. For a typical quarry with 15-foot spacing, the initial movement at the free face may occur in 10 to 12 milliseconds, but the burden only moves about 0.5-foot in 10 milliseconds. With one or two rows of holes, the prime movement is directly out from the face. As the number of rows increases, the rock movement will tend toward the vertical. The low velocity of the broken rock successively reducing the relief toward the free face causes this. This can contribute to “tight” bottom as well as flyrock.

It is a common practice of many blasters to double the delay time on the last row. This provides additional time for the rock ahead of the last row to move forward so that the relief on the last row will be increased. This practice called “skipping a period” will also reduce the upward ripping action and materially reduce the backbreak on the face.

When the blast consists of as many as eight or nine rows, the timing on MS delays should provide the additional time without skipping a period. The NO. 1 through NO. 8 periods (25 through 200 MS) will provide a nominal 25 milliseconds between each period. NO. 8 through NO. 15 (200 MS through 500 MS will provide a nominal 50 milliseconds between each period. NO. 15 through NO. 19 (500 MS through 1,000 MS) will provide a nominal 100 milliseconds between each period. **This sequence is provided only as an example: the actual sequences and intervals of detonator timing vary with manufacturer.**

Always base timing designs on the limitations of detonator accuracy since delays of a given period have a range of actual firing times. Check with your supplier to avoid overlap or crowding.

Even with additional time between rows, the tendency still exists for the rock to stack if the number of rows is excessive. The hole diameter, burden and spacing, and height of face all have a pronounced effect on the number of rows that can be fired successfully without excessive stacking or creating high bottom. When the rock is broken, it will occupy on the average 30 percent more volume (this is termed "swell factor") than it did in the solid (swell factor will vary with the type of rock). In most cases, the material has only two directions to move: to the front and vertically. Obviously, excessive movement in either direction will result in dangerous flyrock. If the number of rows is excessive, forward movement is limited, thus additional space for forward expansion cannot be provided.

The number of rows of large-diameter holes on wide burden and spacing that can be successfully blasted will be less than the number of rows of small-diameter holes on close burden and spacing. The reason for this is that the movement of the front rows with large-diameter holes will not provide the necessary space required for expansion. For the same reasons more rows of shallow holes, 25 feet deep or less, can be successfully blasted than holes 60 feet deep.

MS delay detonators allow the blaster to design the blast to take advantage of the relief provided by the natural terrain, or to create points of relief by the pattern design. They also allow the blaster to control the direction of rock movement within the limits of the natural contour and geology of the formation.

Scaled Distance

4 VAC 25-40-880.B. requires seismic monitoring of each blast, unless the scaled distance, Ds, as calculated with the following scaled distance formulas, is 90 or greater:

$$W = \left(\frac{D}{Ds}\right)^2 ; Ds = \frac{D}{\sqrt{W}}$$

Where,

W = Maximum charge weight of explosives per delay period of 8.0 milliseconds or more.
D = Distance in feet from the blast site to the nearest inhabited building not owned or leased by the mine operator.

Scaled Distance (Ds) means the actual distance (D) in feet divided by the square root of the maximum explosive weight (W) in pounds that is detonated per delay period for delay intervals of eight milliseconds or greater; or the total weight of explosives in pounds that is detonated within an interval less than eight milliseconds.

For example, if the nearest inhabited building not owned or leased by the mine operator is 1,800 feet away, then the maximum charge weight of explosives (W) that would be allowed without seismic monitoring would be: the square of 1,800 feet divided by 90 or $(1800 / 90)^2$, which equals 400 pounds. This means an operator could blast one hole per delay containing 400 pounds of explosives, two holes per delay containing 200 pounds of explosives, or four holes per delay containing 100 pounds of explosives.

4 VAC 25-40-880.A. states that ground vibration, measured as peak velocity resulting from blasting, shall not exceed the limits set forth below at any inhabited building not owned or leased by the mine operator, without approval of the director. A seismograph record is also required for each blast.

Distance (D) to Nearest inhabited Building, feet	Peak Particle Velocity, inches Per second
0-300	1.25
301-5,000	1.00
5,001 and beyond	0.75

The total energy of the ground motion wave generated in the rock around a blast varies directly with the weight of charge detonated. As the ground motion wave propagates outward from a blast, the volume of rock subject to the compression wave increases. Since the energy in the ground shock is distributed over successively greater volumes of rock, the peak ground motion levels must decrease.

Weather and Atmospheric Conditions

Prior to bringing explosives and detonators to the blast site, weather conditions shall be monitored to ensure safe loading and firing, 4 VAC 25-40-800.G.

Atmospheric conditions such as temperature inversions and surface winds can affect the air blast pressure (air overpressure) considerably. The direction and speed of any wind can also affect the travel of an air blast wave. The air blast wave will be bent in the direction that the wind is blowing to a degree depending on the wind speed. Because of the fact that wind speed is usually lower at ground level than it is higher up, the rays may even be bent back to the earth's surface by the wind.

If the proper temperature inversion and wind speed and direction conditions are present at a blast site, it is possible that their effects may combine to produce air blast wave travel. The inversion-bent and wind-carried wave might produce a focal point of high overpressure downwind from the blast site. Air blast (air overpressure) complaints are apt to be heard if the

focal point is near an occupied building or in a residential area. Downwind focusing of an air blast wave reportedly could increase the overpressure by a factor of as much as 100.

It has been found that windows are probably the weakest part of a structure that will be exposed to air overpressure; they are most apt to suffer damage. Poorly mounted panes that are pre-stressed will be cracked and broken most easily. Extremely high overpressure could cause the formation of exterior masonry cracks or interior plaster cracks.

Although it is possible that high air blast overpressure (air overpressure) could cause structural damage; those produced by routine blasting operations under normal atmospheric conditions are not likely to do so. The principal effects are most often: 1) a slight overpressure that rattles windows, and, 2) noise that startles people. The rattling windows and noise may leave them under the impression that their house was violently shaken by blasting. Complaints may result if the subjective response of the people is such that the disturbance is annoying or intolerable.

In situations where air overpressure from production shooting can be a problem, it is often customary to fire a small surface shot and measure the peak overpressure at the point of interest. If a normal reading is obtained, then the main production shot is fired. If it is excessively high, then the blast should be delayed. Local meteorological information can be obtained from local weather stations, airports, and smoke rising from smoke stacks.

Time of Day

Boreholes to be blasted shall be loaded as near to the blasting time as practical. Loaded shots shall be blasted as soon as possible upon completion of loading and connection to the initiation device. **Surface blasting shall be conducted during daylight hours only (4 VAC 25-40-800.I.).**

This page intentionally left blank.

SECTION 5

BLAST EFFECTS

This page intentionally left blank.

SECTION 5 – BLAST EFFECTS

- Introduction
- Air Overpressure (also known as Airblast)
- Ground Vibration
- Blasting Restrictions-Air Overpressure and Ground Vibration
- Flyrock

BLAST EFFECTS

Introduction

The public relations problems involving blasting have increased in the past years. The increased difficulty that blasters face with public relations is the result of urban expansion and the commencement of surface operations near densely populated areas. When blast effects intrude upon the public's comfort, strained relations usually arise between operators and surrounding communities.

The two most common complaint problems are air overpressure (also referred to as air blast) and ground vibration. Blasting produces air overpressure and ground vibration that can result in structural response at off-site buildings. This perceived motion could be very disturbing to homeowners; therefore, it is advantageous to establish good public relations with nearby neighbors. Most homeowners mistakenly believe that any motion of window glass or house structure originates from ground vibration striking the foundation of the house, when in fact the concussion element of air overpressure is often the culprit. DMM Safety & Health Regulations establish maximum limits for both ground vibration (4 VAC 25-40-880) and air overpressure (4 VAC 25-40-890) based on comprehensive studies conducted by the U.S. Bureau of Mines (USBM).

Explosive manufacturers, mine operators and government agencies have spent substantial amounts of time and effort in order to gain a better understanding of the relationships between blast variables and the blast effects of air overpressure and ground vibration. Much knowledge has already been gained and numerous studies have yielded guidelines for the case of delay blasting and modern monitoring techniques. These studies and guidelines, if used, will help reduce the likelihood of damage to domestic structures and hopefully reduce the number of public complaints. The process by which blasting causes damage to structures is not a well-defined process. While the variables of the blast design can be controlled, there is some variation in the strength of an explosive and the actual delay time between the individual explosions that comprise a round. There is substantial random variation in the vibration propagation characteristics of the rock, the air overpressure propagation characteristics of the atmosphere (weather changes), and the strength and the ability of the nearby man-made structures to withstand the stresses of the blast without breaking. This means that until a substantial body of experience has been collected at a given site, there is a small likelihood that the next blast will produce more damage than the last one of like size. This must be kept in mind when assessing blasting safety.

Blasters can overcome the complaints about noise and vibration through careful blast design with effective use of delays, by careful monitoring of the blast effects, and by meeting with neighbors to explain the care and safety precautions used to protect their property and themselves. Communication and keeping the public constantly informed are a big factor that will help to reduce the number of complaints. Blasters must continue to analyze blast design, monitor blasts effectively, and maintain accurate records in an effort to reduce persistent complaints. The records of blast design and blast effect are very important factors when government agencies investigate and discuss the problems of complaints.

Air Overpressure

In order to help reduce and or avoid air overpressure complaints, a blaster must understand the relationship between an explosive blast, weather conditions and an air overpressure.

The air overpressure from an explosive detonation is a compression wave in the air. It is caused either by the direct action of explosive products from an unconfined explosive in the air or by the indirect action of a confining material subjected to explosive loading. Noise is the portion of the spectrum that lies in the audible range from 20 to 20,000 hertz. The concussion of a blast results from the spectrum below 20 hertz. Air overpressure is described in terms of the maximum pressure in pounds per square inch (lb/inch^2), or in terms of the sound pressure level measured in decibels (dB). Figure 5-1 may be used to convert from one scale to another. As shown on Figure 5-1, 140 dB is the threshold of pain, 85 dB is normal street traffic, 40 dB is a background noise level in the home, and zero is the threshold of hearing.

Air overpressure is measured with a specialized microphone attached to a seismograph in dBs or lb/inch^2. Current DMM S&H Regulations limit air overpressure to 133 decibels at any inhabited building not owned or leased by the operator. (4 VAC 25-40-890)

All of the energy liberated by the explosive is initially in the form of a highly compressed gas. Some of that gas escapes to the surface and travels through the air as air overpressure. The largest part of the compressed gas energy goes into breaking and moving rock. The sudden movement of the rock at its face or at the ground surface also causes a disturbance, which propagates through the air. Parts of these disturbances are in the audible range of frequencies (>20 Hz) and are collectively called noise. Some of these disturbances are in the sub-audible range. Both parts together are called air overpressure. If sufficiently intense, they can cause buildings to vibrate and crack, windows to vibrate or break and discomfort or pain to individuals.

Atmospheric conditions affect the intensity of noise from a blast at a variable distance. These conditions determine the speed of sound in air at various altitudes and directions. The speed of sound is determined primarily by two factors: (1) temperature and (2) wind speed. Normally the air temperature decreases as the altitude from the earth's surface increases. A temperature inversion exists if the air becomes warmer as the altitude increases.

If the weather conditions (temperature and wind velocity) are such that a greater sound velocity in any direction occurs above the earth's surface, a sound speed inversion exists and therefore bends the sound rays back toward the earth's surface.

When a temperature inversion exists, the temperature and sound velocity increase with altitude. The sound rays will bend back toward the earth's surface but will decrease more slowly with distance than with a sound speed inversion.

Conversely, when the temperature decreases with altitude and sound speed, the sound rays are refracted away from the earth's surface. This condition is more stable and is the most frequent condition during the time of the most surface blasts. With this condition, the noise level decreases rapidly with distance.

Figure 5-1. Sound Level Conversions

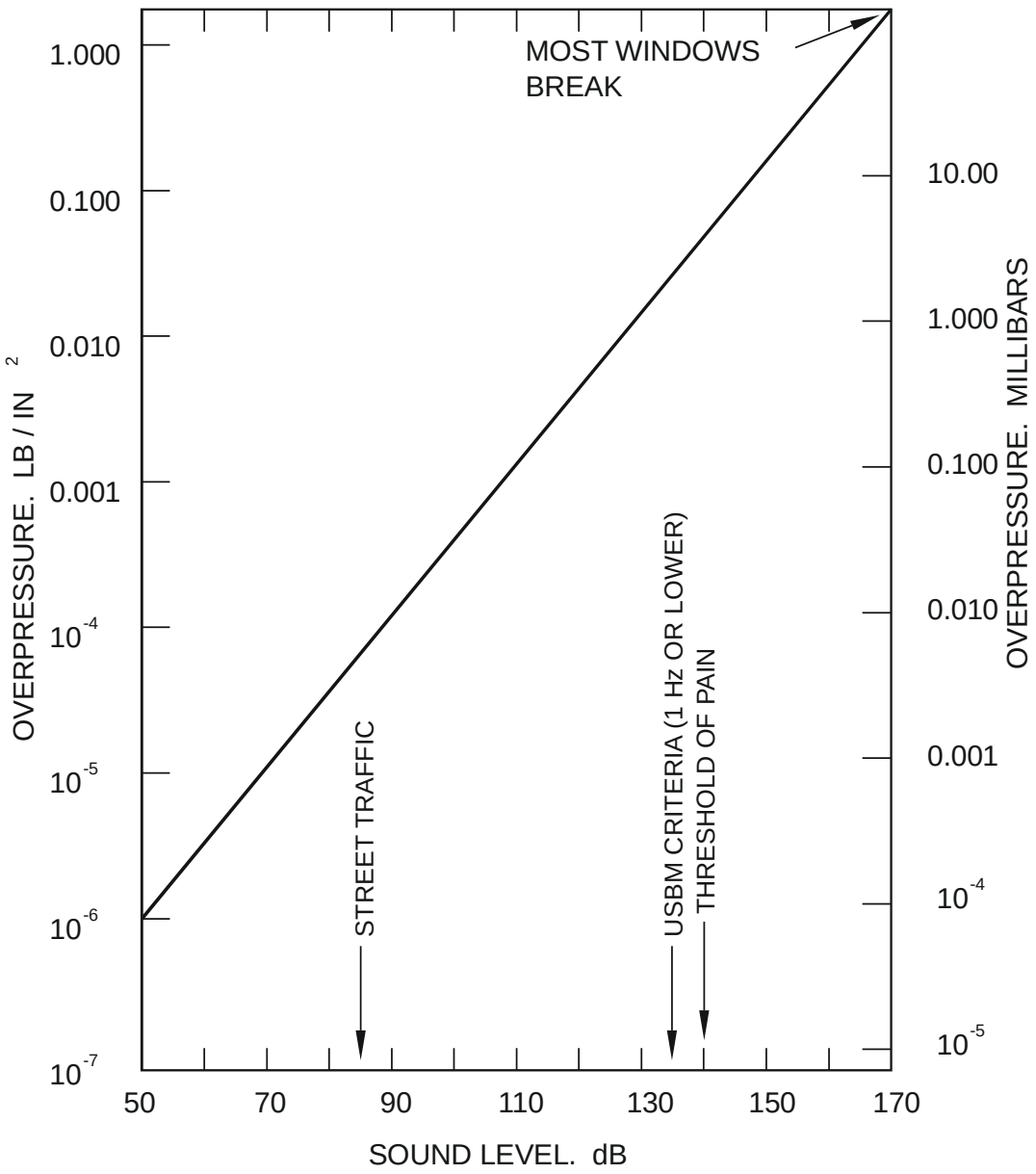

In the early morning, a temperature inversion may be present following clear nights with low wind speeds that prevent mixing of the atmosphere. The lack of cloud cover allows the temperature of the ground and air above it to drop rapidly creating the inversion. Blasting done in the early morning will result in loud noise levels. As mid-morning arrives, the sun's rays will cause the ground temperature to warm and rise and the increased ground temperature warms the air in contact with it. This process will continue throughout the day and the mid-morning. At this time, favorable conditions for blasting are present. Near and after sunset, the temperature of the earth's surface begins to cool and a low altitude inversion may exist.

The presence of cloud layers signifies the presence of a temperature inversion. The commonly accepted idea that noise is reflected from the bottom of clouds is mistaken. The clouds signify the presence of an inversion, which reflect the sound back toward the earth's surface.

Changes in sound velocity with altitude may also be caused by wind. Wind is highly directional. Normal wind increases with altitude and therefore causes an increase of sound speed with an increase of altitude. The wind direction may result in an increase or decrease in noise levels in the down wind direction. The effect of wind on noise levels is generally the greatest in the winter months because of the higher wind speed that is present during this time of year. In the warmer months, wind speeds are normally lower and help prevent the formation of temperature inversions.

The following are favorable atmospheric conditions for blasting:

1. Clear to partly cloudy skies, light winds and a steady increasing air temperature from daybreak to shot time.

2. Blast time should be delayed to at least mid-morning to allow early morning temperature inversions, if present, to be eliminated.

The following are unfavorable atmospheric conditions for blasting:

1. Foggy, hazy or smoky days with little or no wind or conditions associated with temperature inversion.

2. During strong winds accompanying the passage of a cold front.

3. During periods of the day when the surface temperature is falling.

4. Early in the morning or after sunset on clear days.

5. Cloudy days with a low cloud ceiling, especially when there is little or no wind.

Air overpressure is usually caused by one of three mechanisms. The first cause is energy released from unconfined explosives such as uncovered detonating cord trunklines or mudcapping used in secondary blasting. The second cause is the release of explosive energy from inadequately confined borehole charges resulting from inadequate stemming, inadequate burden or mud seams. The third cause is movement of the burden and the ground surface. Blasts are designed to displace the burden. When the free face moves out, it forms an air compression wave that results in air overpressure. For this reason, locations in front of the free face receive higher air overpressure levels than those behind the free face.

The following are typical air overpressure sources for most blasting projects.

1. The air pressure pulse (APP), caused by the sudden outward displacement of the rock face, is a low frequency pulse.

2. Conversion of ground surface vibration to air vibration at some distance from the explosion called the rock pressure pulse (RPP) or in seismological literature, air coupled ground roll.

3. Venting of the explosion produces gas to the surface through broken rock, called the gas release pulse (GRP).

4. Escape of explosion produced gases to the surface up the drill bole after the stemming is blown out, called the stemming release pulse (SRP).

5. Explosion of detonating cord exposed on the ground surface, which produces a high frequency pulse, called the surface detonation pulse (SDP).

Structural effects of most common concern are window breakage and plaster cracking. Research has largely been limited to single-family houses. Overpressures of only 0.03 PSI can vibrate loose window sashes, often to the annoyance of the public, but without permanent damage. Air overpressures of 1.0 PSI will break most windowpanes and as pressures exceed 1.0 PSI, plaster in flexible walls will crack. Windows and plaster that have been stressed previously, that is by house settlement may be damaged at pressures down to 0.1 PSI.

The odds of a large window being broken were indicated to be 1/10,000 at 0.012 PSI. Similar odds for small windows exist at 0.030 PSI. For common practice, 0.1 PSI (130 dB) can be taken as the safe limit for window glass (Figure 5-1). Air overpressures are relatively strong sources of midwall vibrations, and poor sources of corner (whole-structure racking) vibration. The air overpressure levels producing the same amounts of corner vibration as 0.50 in./sec ground vibration are 0.020 to 0.024 lb/in. squared (137 to 138 dB). Air overpressures with 0.007 to 0.009 lb/in. squared (128 to 130 dB) produce wall vibration equivalent to that from 0.50 in./sec. ground vibration. From these equivalencies, air overpressure appears less likely to crack walls than ground vibration.

When a large number of explosive charges are detonated with small time delays between them, the air overpressure pulses from the individual charges may superimpose in a given direction and produce a strong air overpressure.

An air overpressure, whether audible or inaudible, can cause a structure to vibrate in much the same way as ground vibrations. Air overpressure is measured with a blasting seismograph. Both amplitude and frequency are measured. The amplitude is measured in decibels or pounds per square inch and frequency is measured in hertz. Air overpressure from a typical surface blast has less potential than ground vibration to cause damage to structures. However, air overpressure is a frequent cause of complaints. When a person senses vibration from a blast or experiences house rattles, it is usually impossible to tell whether ground vibrations or air overpressure is being sensed. A thorough discussion of air overpressure is a vital part of any surface mine-public relations program.

Because air overpressure is a major cause of blasting complaints, some operators choose to seismograph all surface blasts. Air overpressure, though, does result in a potential for structural damage.

Air overpressure recordings provide good evidence in case of complaints or lawsuits. Air overpressure readings taken in conjunction with ground vibration readings are especially helpful in determining which of the two is the primary cause of complaints. Sound travels faster in warmer air due to the air molecules being less dense than in colder air. Also, the speed and direction of the wind can cause a "focusing" affect of the concussion and sound waves.

Properly executed blasts, where surface explosives are adequately covered and borehole charges are adequately stemmed, are not likely to produce harmful levels of air overpressure. Careful attention to and adjustment for the following details will usually improve results by reducing air overpressure, and, subsequently, the number of complaints:

The following are methods of controlling air overpressure:

1. Avoid the use of unconfined explosives:
   (a) Bury detonating cord one foot or more;
   (b) Use low-load detonating cord if possible;
   (c) Never adobe or mudcap in populated areas unless necessary.

2. Use adequate stemming:
   (a) Use crushed stone for stemming in wet holes for better confinement and to avoid densifying water with drill fines so that low-density charges may float;
   (b) Use additional stemming on the front row if excessive backbreak from the previous shot is present.

3. Use drill patterns having nearly equal burden to spacing ratios.

4. Use a longer delay interval between rows than between holes in a row.

5. Be sure the blast proceeds in the proper sequence.

6. Consider geologic <u>abnormalities</u>:
   (a) Use nonexplosive decks through mud-dirt seams, weak seams, etc.;
   (b) Have drillers report cavities that could be overloaded with explosives;
   (c) Avoid or backfill cavities and day-lighted seams;
   (d) Maintain accurate drilling records;
   (e) Check the drillers' log to get an accurate analysis of all boreholes.

7. Schedule shots at times when neighbors are busy; not at home or when they expect blasting to occur.

8. Avoid excessive delays between holes.

9. Evaluate topography for burden and focusing effects. Orient face to avoid facing built-up area.

10. Analyze weather for temperature inversions, wind and low cloud cover.

11. Test-shoot and develop site-specific criteria.

Good pre-blast planning again is important. Follow the drill pattern closely, provide adequate stemming in boreholes - at least equal to the burden, blast during favorable weather conditions, and cover any trunk lines or any other explosive devices to minimize the air overpressure effects.

Ground Vibration

The public relations problem of ground vibration that is associated with the use of explosives is just as prevalent as the air blast problem. Once again, manufacturers, explosive consumers and government agencies have spent a vast amount of time and effort to gain a better understanding of ground vibration.

The detonation of an explosive contained in a drill hole or series of drill holes generates a large volume of high-temperature (2,000-5,000^{o} C), high-pressure (0.2×10^{6} to 2.0×10^{6} PSI) gas. The sudden application of this pressure to the cylindrical surface of a drill hole generates a compressive radial stress and strain in the rock. This wave crushes the rock that immediately surrounds the borehole. The boundary that surrounds the crushed rock area represents the area of the blast-fractured zone. The waves attenuate (decrease) in amplitude with increasing radius, R, from the explosive and at some distance no longer produce breakage but only vibration of the ground. Figure 5-2 shows a plan and cross section view of an idealized single hole blasting operation and is used to define some terms of interest. At any point, the displacement of the ground can be resolved into three perpendicular components: U_R (radial), U_V (vertical), and U_T (tangential). For reasons to be explained below, it is customary to express damage criteria, and to predict and to measure ground vibration, in terms of the three orthogonal components of velocity-- U_R, U_V, and U_T. When the intensity of the stress wave is reduced so that there is no permanent deformation of the rock, the wave propagates through the rock in an elastic manner such that the rock particles will return to their original position following passage of the stress wave. The stress waves travel through the earth causing rock particles to vibrate. All blasts create ground vibration. This situation is similar to the circular ripples produced on the surface of calm water when struck by a rock. Ground vibrations are measured with a seismograph machine. Vibrations are measured in terms of amplitude (size of the vibrations), measured in inches per second of peak particle velocity (PPV), and frequency (number of times that the ground moves back and forth in a given time period), measured in velocity in hertz or cycles per second. Excessively high ground vibration levels can damage domestic structures. Moderate to low levels of ground vibration can be irritating to neighbors and can cause complaints and or legal claims of damage and nuisance

Figure 5-2. Plan and Cross Section

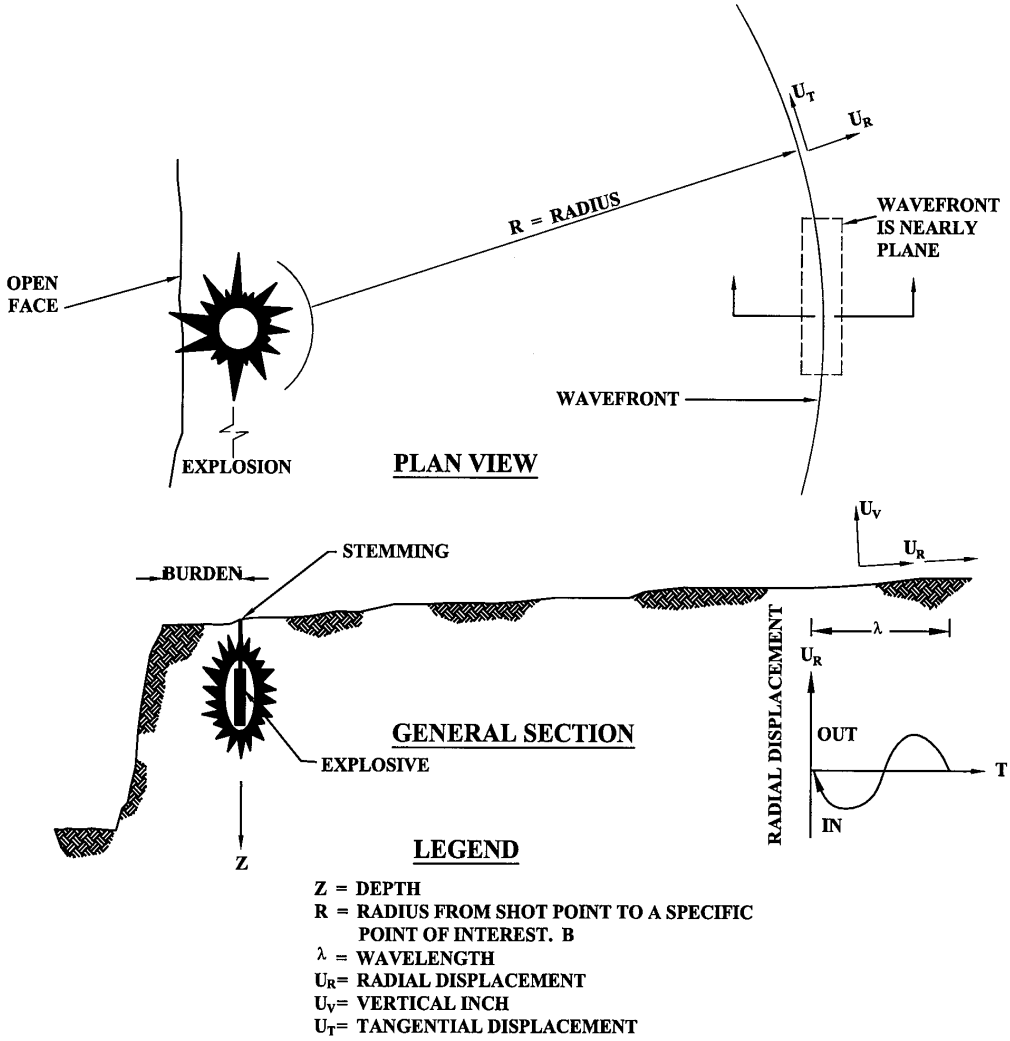

Studies have shown that high frequency wave energy is absorbed more readily than low-frequency wave energy so that the energy content of stress waves at large distances is concentrated at low frequencies. The velocity is referred to as particle velocity in order to distinguish this quantity from propagation velocity. The peak particle velocity of ground vibration depends on the maximum charge-weight-per-delay of eight milliseconds or more and not on the total charge weight of the blast. The most significant ground motion parameter is the maximum radial particle velocity u_R, which is usually the maximum of the three components at the radii of interest.

Various kinds of stress waves travel at different speeds and interact in a complicated manner with themselves and the material in which they travel. A blast that finishes detonating

in a few hundred milliseconds or less can produce ground motion for several seconds at locations several hundred yards away. A process known as dispersion, whereby the different frequencies travel at different velocities, enhances the lengthening of ground motion with distance.

The amplitudes of ground vibration at a given distance from an explosion increases with the following:

1. The energy in the explosion. Energy is the capacity to do work (the fracturing and movement of rock and the creation of air and ground-transmitted shock and vibration) and is directly proportional to the weight of explosive. Energy (W) is a weaker function of the type of explosive used. For practical purposes, all commercial explosives in use today can be taken as having the same energy/unit weight. The number of explosives (delays) fired in round times the energy per delay determines the total energy in the round. It is common practice to express energy in units of pounds of explosive, although in a strict sense energy should have units of force times distance.

2. The confinement of the explosive by the burden (see Figure 5-2) and stemming. It is usual practice to stem all holes to minimize airblast effects. Pre-split shots have a semi-infinite burden. The confinement of the explosive determines the partitioning of the energy among rock breakage, ground vibration and airblast. The greater the confinement, the more energy directed into rock breakage and vibration and the less to airblast. Hole spacing and sequence of firing also impact confinement.

3. The type of rock has a weak influence on maximum particle velocity. The denser the rock, the higher the peak particle velocity close to the explosion. At large distances, the reverse is sometimes the case. However, the effect of the type of rock is so weak that it is usually ignored in preliminary estimates of ground motion and it is automatically accounted for in project specific, ground motion curves developed by physical observations.

Blasters can overcome the vibration complaints through careful blast design, the effective use of delays, and by careful monitoring of the blast effects. The best protection against complaints and damage claims is good public relations. The blaster should inform local residents of the need and importance of blasting. A blaster should also stress the relative harmlessness of properly controlled blasting vibrations. In situations where complaints persist, continued attention to blast design, effective monitoring and good record keeping will be of invaluable importance. Prompt and sincere response to complaints is vital.

Blasting induced ground motion has some important characteristics. In close-proximity to a blast, the predominant frequencies exceed 100 Hz and the vibration drops off sharply with distance. In general, frequency will decrease as the distance from the explosion increases and the maximum particle velocity will decrease.

Excessive ground vibrations are caused by either putting too much explosive energy into the ground or by not properly designing the shot. Part of the energy that is not used in fragmenting and displacing overburden will go into ground vibrations. The vibration level at a specific location is primarily determined by the maximum weight of explosives per delay period and the distance of that location from the blast. The delays in a blast break it up into a series of smaller, very closely spaced individual blasts. The longer the intervals between delays the better the separation will be between the individual blasts. Eight milliseconds is the minimum delay that can be used between charges if they are to be considered as separate charges for vibration purposes. In addition to charge weight per day, distance and delay interval, two other factors affect the level of ground vibration. The first factor is overconfinement. A charge with a properly designed burden will produce less vibration. The second factor is an excessive amount of subdrilling. Excessive subdrilling will cause an extremely heavy confinement of explosive energy. In multiple row blasts, there is a tendency for the later rows to become overconfined. To avoid this, it is often advisable to use longer delay periods between the later rows to give better relief.

Two vibration limits are important; the level above which damage is likely to occur and the level above which neighbors are likely to complain. There is no precise level at which damage begins to occur (Table 5-1). How much actual ground movement takes place determines whether structural damage will occur to buildings off the mine site. The lower the frequency produced, the more likely that structural damage can occur (Figure 5-3). Frequency waves below 20 Hz are inaudible but are capable of producing structural vibration and damage.

Table 5-1. Categories of Building Damage

Damage to buildings can be grouped in three categories	
Threshold:	Formation of new minor cracks in plaster or at joints in wallboard, opening of old cracks and dislodging loose objects.
Minor:	Superficial, not affecting the strength of the structure; for example, loosened or fallen plaster, broken windows, significant cracks in plaster, hairline cracks in masonry.
Major:	A significant weakening of the structure, large cracks, shifts of the foundation, permanent movement of bearing walls, settlements which cause distortion of the structure or walls out of plumb.

Figure 5-3.

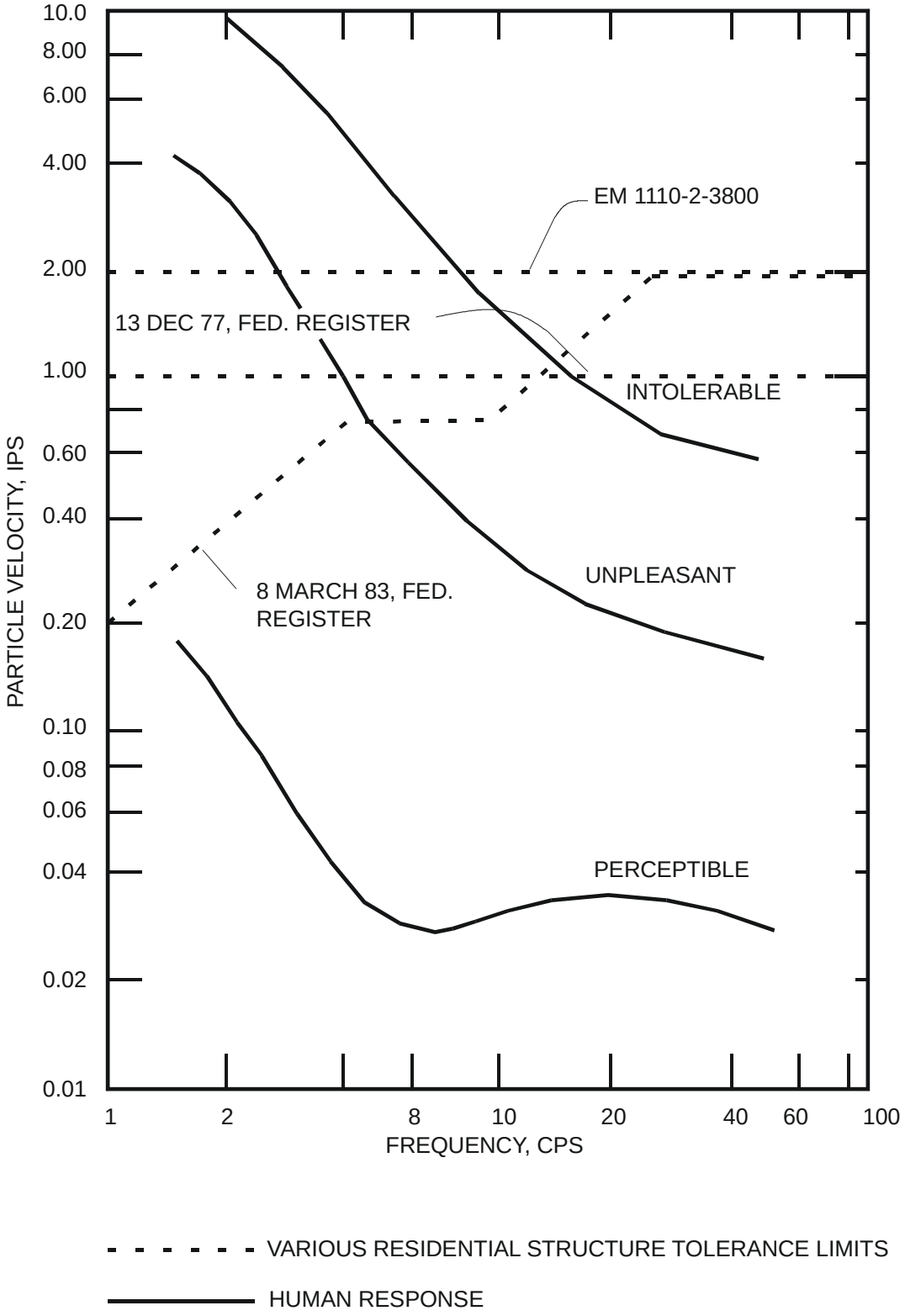
10.0
8.00
6.00
4.00
2.00
1.00
0.60
0.40
0.20
0.10
0.08
0.06
0.04
0.02
0.01
PARTICLE VELOCITY, IPS
1
2
8
10
20
40
60
100
FREQUENCY, CPS
EM 1110-2-3800
13 DEC 77, FED. REGISTER
INTOLERABLE
UNPLEASANT
8 MARCH 83, FED. REGISTER
PERCEPTIBLE
VARIOUS RESIDENTIAL STRUCTURE TOLERANCE LIMITS
HUMAN RESPONSE

The damage level depends on the type, condition, age of the structure, the type of ground on which the structure is built and the frequency of the vibration. People tend to complain about vibrations far below the damage level. The threshold of a complaint depends on complainant health, fear of damage, attitude toward the mining operation, diplomacy of the mine operator, and how often and when blasts are fired and the duration of the vibrations. The vibration tolerance level is very dependent on local attitude toward mining. Careful blast design and good public relations are essential elements for an operator to live in harmony with neighbors in order to minimize complaints and avoid legal claims.

The intensity of stress waves that can be tolerated by various kinds of structures must be established before acceptable charge weights at various distances can be determined. The level of motion required to damage a structure depends upon its construction. For example, a steel-framed building can tolerate a more intense stress wave than a residential structure with plaster walls. Because plaster is the weakest of the most commonly used materials for construction and because of the prevalence of such structures, damage criteria is based on this type structure. Blasters may consult structural engineers who are able to specify permitted vibration levels for certain types or kinds of structures.

Good pre-blast planning is essential to ensure frequency waves resulting from the blast remain above the structural damage levels. This can be achieved by varying the duration of the blast, varying the pounds per delay of explosives, maintaining proper burden and spacing, or any combination.

The following is a list of steps that a blaster can take to help reduce ground vibration:

1. Use a blast design that produces the maximum relief that is practical. Explosions in boreholes, which have good relief and those having nearby free faces, produce less ground vibration. The use of delay blasting techniques establishes internal free faces, which reduces ground vibration. The proper design of delay patterns can help achieve maximum relief. In general, when blasting multiple row patterns, greater relief can be obtained by using a greater delay time between rows than between holes in a single row. A delay time between holes in a row of at least one millisecond per foot of burden is usually recommended for the necessary relief and maximum fragmentation.

2. Use the proper powder factor. An excessive powder factor will usually increase both ground vibration and air blast and may cause excessive burden displacement or fly rock. On the other hand, an insufficient powder factor will usually increase ground vibration by delaying or reducing the effect of stress waves reflected off the free faces. The <u>optimum</u> powder factor must be determined by experimentation at any given blasting site and used.

3. It is necessary to reduce the charge/delay to some value that will produce a maximum particle velocity less than those in the damage criteria. To achieve the desired fragmentation, it is necessary to keep the powder factors above some minimum level. Powder factor is defined as weight of explosives in pounds per cubic yard of rocks to be excavated. Depending on the type of rock, the burden, and the maximum fragment size desired, the proper power factor will usually range from 0.5 to 1.0 lb/cu yd. To

accomplish both purposes it is sometimes necessary to increase the number of shot holes drilled. If no delays are being used, the obvious first step is to introduce the use of delays. This can be done up to the point where the explosive in each borehole is fired separately by using a combination of millisecond delays and a multiple circuit blasting machine, If this is not sufficient, decking of the charge within the borehole should be considered. This technique involves several charges separated by 5 ft or more of stemming the same hole, with one fired after the other through the use of delays. If it was originally necessary to fully load the hole to get the desired powder factor, decking will require either a larger diameter shot hole or more shot holes at a closer spacing. Since the loading, wiring and initiation of decked shots are more complex; this procedure requires greater experience. Alternatively, it may be desirable to avoid decking and simply reduce the spacing between shot holes. This option is not as complex but usually requires more boreholes.

4. Use a spacing-to-burden ratio equal to or greater than one, if possible. The presence of weak seams or irregular backbreak may dictate the use of a spacing-to-burden ratio less than one.

5. Control drilling of blast holes as closely as possible.

6. Keep the amount of subdrilling to the minimum required to maintain good floor conditions. A typical amount of subdrilling is 0.3 times the burden at floor level. Excessive subdrilling will usually increase ground vibration because of high confinement and a lack of a nearby free face.

7. Use various techniques to reduce charge-weight-per-delay which should in turn reduce the peak particle velocity:
   (a) Reduce hole depths and reduce bench heights;
   (b) Use smaller diameter holes;
   (c) Subdivide explosive charges in hole by using inert decks and fire each explosives deck with an initiator of a different delay period;
   (d) Use electronic timers to increase the available number of delay periods of electric blasting caps and to increase timing flexibility. Sequential timers are used for this purpose and are real effective in helping to shorten the duration of ground motion.

8. Use delay electric blasting caps or surface connectors to reduce the number of holes on a delay. If the time for a wave (compression) to travel from the shot hole through the burden to the face and be reflected back to the borehole as a different wave (tension) is less than the delay time between charges, the second charge is more confined and a greater amount of its energy results in vibration. If for multiple row blasts, the rock in front of the first row of borehole has not moved sufficiently forward before the detonation of the second row the confinement effect is also strengthened. In general, the longer the delay intervals within the millisecond range the better. This interval must be short enough that the round is not perceived by an observer to be a series of separated explosive events.

The threshold of cracking reported ranges from 0.8 to 11.8 in/sec. The data show that the higher the frequency of the maximum particle velocity, the higher the threshold. The data also show a trend in which surface mine blasting produces lower thresholds than quarry blasts which are in turn lower than construction blasting. This trend is consistent with the frequency effect as shown by the relation of the predominant frequencies in the three types of events in Figure 5-3.

When the maximum particle velocity component in any direction exceeds 2.0 in/sec, the threshold of cosmetic damage begins. Minor damage begins at about 5.4 in/sec and major damage at about 7.6 in/sec. There have been more than 100 observations of residential structures at particle velocities in the 2-6 in/sec range where no blasting damage was recorded. The damage threshold particle velocity is a random variable and in the majority of cases, the threshold of damage will lie below 2 in/sec. The cases below the 2-in/sec level where some damage occurred are infrequent.

Threshold damage is always cosmetic in nature as it does not affect the usefulness of the structure but can result in an economic loss. Most minor damage such as cracking of masonry is also cosmetic in nature, but can cause loss of use of the structure until repaired. Most minor damage can be quickly repaired. In general, cracking is more likely to occur in older structures that have already suffered prestraining and fatigue, and in plaster, rather than in newer wallboard construction. Predominant frequencies observed in measurements of construction blasting range from 10 to 40 Hz while those from quarrying operations are in the 5-30 Hz range. Frequency decreases with range. Particular stratigraphic arrangements can enhance particular ground motion frequencies. Likewise, particular structural arrangements of buildings or components when excited by ground vibrations have a natural preference to vibrate at a particular frequency called a natural frequency. Typical natural frequency levels are shown in Table 5-2:

Table 5-2. <u>Typical Natural Frequencies</u>

Structure or Element	Natural Frequency, Hz
Multistory Building	**F = 0.1N (N = number of stories)**
Radio Tower 100 ft tall	**3.8**
Petroleum distillation tower 65 ft tall	**1.2**
Coal silo, 200 ft tall	**0.6**
Building walls	**12 - 20**
Wood frame residences (1 and 2 story)	**7.0 (Standard deviation = 2.2)**

Most vibrations from construction blasting and nearly half of the vibrations from quarry operations are at frequencies above the range given above. A residential structure will respond less (that is, strain less) when shaken by a 1.0 in/sec maximum velocity ground motion at a principal frequency of 80 Hz than it will to a 10 Hz ground motion with the same maximum velocity. The structure tends to resonate (that is, vibrate at ever increasing amplitudes) when shaken by a ground motion with a large number of cycles at or near its natural frequency. While this tendency to increase without limit is controlled by damping and the transient nature

(nonsteady state) of the blasting induced ground-motion; increases of a factor of 4 in response due to this phenomenon are not uncommon. In the absence of velocity versus time data from a test blasting program at the site, from which frequency of ground motion can be determined, it is recommended that construction and quarry blasting peak particle velocities at the nearest residential structure be limited to 2.0 in/sec or less. Experience indicates the probability of damage to residential structures is at or below this level will be very small.

Observations by the Bureau of Mines have shown recorded particle velocities of 0.75 in/sec for modern residences and 0.5 in/sec for older structures have little or no effects. The Bureau of Mines indicates that one of the motivations for these levels were human irritation with, and tolerance of, repeated blasting operations. The Bureau of Mines established a 1.0 in./sec criteria for commercial surface mining blasting in the proximity of human habitation and DMM adopted this as well (4 VAC 25-40-880). Also, DMM has adopted criteria to permit alternate use of the allowable maximum velocity-frequency chart (4 VAC 25-40-880). The design engineer or equivalent should consider the age of the structures, the condition of the structure, the type of blasting (construction or quarry), and pick a threshold value consistent with the expected frequency content of the motion and the appropriate level of risk of damage. Comparison of human response to steady state vibration as a function of frequency and various blasting vibration criteria for residential structures.

The effects of transient motion with and without accompanying noise and observer bias are presented in the table below (Table 5-3).

Table 5-3 and Figure 5-3 (shown previously) indicate that humans are less tolerant of low frequency blasting vibrations than are buildings, and that accompanying noise and bias against the project at which the blasting is being done makes them more unwilling to accept transient vibration. The previous table indicates that repeated blasting operations with maximum particle velocities of over 1/2 in/sec at occupied structures will produce complaints and that operation at the 1/4 in/sec level may in some cases result in complaints. Good blasting practice includes consideration for these human responses at offsite locations.

Table 5-3.

Maximum Particle Velocity In./sec.	Transient Motion, No Sound Effects, Impartial Observer	Blasting Accompanied by Sound Effects, Biased Observer
0-0.02	**"Not noticed"**	**"Not noticed"**
0.02-0.06	**"Not noticed"**	**"Noticed, complaints possible"**
0.06-0.20	**"Noticed"**	**"Noticed, complaints possible"**
0.20-0.40	**"Noticed"**	**"Severe, complaints likely"**
0.40-1.20	**"Disturbing"**	**"Severe, complaints likely"**
1.20-2.00	**"Severe"**	**"Severe, complaints likely"**

Mine operators often receive blasting complaints from neighbors even though they are well within ground vibration and air overpressure limits being enforced by DMM. This can often be attributed to the fact that most homeowners are not knowledgeable about blasting;

therefore, their concerns may be alleviated by meeting with them to discuss how blasts are designed to minimize effects, and how structure response from blasting compares with other sources such as closing doors, loud traffic, etc. In addition, mine operators can request technical assistance from DMM in addressing blasting concerns by neighbors.

Bureau of Mines indicates that one of the motivations for these levels were human irritation with, and tolerance of, repeated blasting operations. The Bureau of Mines established a 1.0 in/sec criteria for commercial surface mining blasting in the proximity of human habitation and DMM adopted this as well (4 VAC 25-40-880). Also, DMM has adopted criteria to permit alternate use of the maximum allowable velocity-frequency chart (4 VAC 25-40-880.C.). The design engineer or equivalent should consider the age of the structures, the condition of the structure, the type of blasting (construction or quarry), and pick a threshold value consistent with the expected frequency content of the motion and the appropriate level of risk of damage.

Many mine operators prefer to seismograph every blast. Seismograph recordings are very useful in understanding and troubleshooting ground vibration problems. Seismograph records provide excellent evidence in case of later complaints or damage lawsuits.

A seismograph is a special instrument that is used to measure particle motion that is associated with stress waves. The velocity type seismograph is the most widely used type for measuring ground motion generated by blasting operations. The velocity type seismograph records particle velocity of the stress wave at a particular location. Particle velocity is the rate of change in the stress wave amplitude as a function of time. A seismograph will record the particle motion of stress waves in three mutually perpendicular directions. The three directions are longitudinal or horizontal, transverse, and vertical. Most seismographs are normally constructed to measure particle velocities ranging from 0.1 to 10 inches per second over a frequency range of 2 to 200 hertz or cycles per second.

Blasting Restrictions – Air Overpressure and Ground Vibration

DMM Safety & Health Regulations establish limits for air overpressure and ground vibration measured at inhabited buildings not owned or leased by the mine operator. The limit for airblast is 133 decibels, as measured with a 2 Hz or lower flat response microphone, at any inhabited building not owned or leased by the operator. (4 VAC 25-40-890)

The U. S. Bureau of Mines studied blasting vibration for most of the last century, and their studies indicated that the best measurement unit for vibration was the velocity of the ground movement. In the 1970's, the Bureau proposed vibration limits that depended on the distance from structures to the blast. These limits were selected to prevent damage to structures, and have been widely adopted. Numerous studies done since then have proven the validity of that standard, and the Division of Mineral Mining regulations are based on that work. DMM blasting limits range from 0.75-1.25 inches/second, when based solely on the distance from the blast to the nearest structure. (4 VAC 25-40-880.A.)

In addition, research has found that the frequency of ground vibrations also affects structures. These frequencies are measured in cycles per second, just like radio waves or musical notes. If the blasting frequencies are very low (in the 6-12 cycles per second range),

they can match the natural frequency of a structure, and increase the vibration of that structure. This effect is addressed in the regulations by a graph that changes the maximum allowable ground vibration velocity as a function of the frequency (Figure 5-4). Basically, this graph allows a variation in the allowable ground vibration velocities as the frequency of that ground vibration increases, from a minimum of 0.2 inches per second up to a maximum of 2.0 inches per second. (4 VAC 25-40-880.C.)

With the exception of very low energy blast events, the mine operator is required to measure ground vibrations using a seismograph, at the closest structure to the blast site that the company does not own. The information is required to be kept by the operator for at least 3 years. (4 VAC 25-40-880.B.)

If necessary to prevent damage the DMM Director may specify lower allowable ground vibration and air overpressure limits (4 VAC 25-40-895). It is important that the mine operator inform the certified blaster responsible for designing the blast the method of compliance being used, or any other restrictions imposed by DMM or local authorities

Flyrock

DMM Safety & Health Regulations state that the design and loading of a blast shall provide sufficient burden, spacing, and stemming to prevent flyrock or other dangerous effects (4 VAC 25-40-800 D.) Flyrock occurs when blasting operations result in flying rock fragments or missiles, which have the capacity to damage a structure or injure a person. Flyrock is more of a problem in highly fractured rock than in massive rock.

Flyrock means any uncontrolled material generated by the effects of a blast that is hazardous to persons or to property not owned or controlled by the operator. It represents a serious hazard to both mine employees and other persons who may be located at, or near the mine.

DMM Safety and Health Regulation 4 VAC 25-40-800.D. requires the certified blaster and mine operator to report flyrock incidents immediately to DMM and to note details in the blast record.

For the blaster in charge, the mention of flyrock conjures images of confrontations with neighbors and regulatory agencies. Investigations of flyrock incidents in Virginia have often revealed one or more of the following contributing factors:

1. Angled boreholes with varying amounts of burden along the length of the borehole;
2. Shallow boreholes (snake-holes) in toe of free-face with insufficient stemming;
3. Inadequate burden for the diameter of borehole drilled;
4. Insufficient stemming for borehole depth and burden;
5. Overloaded boreholes where loading density exceeded rock density of burden;
6. Inadequate controls during secondary blasting of boulders.

Figure 5-4. Alternative Blasting Level Criteria

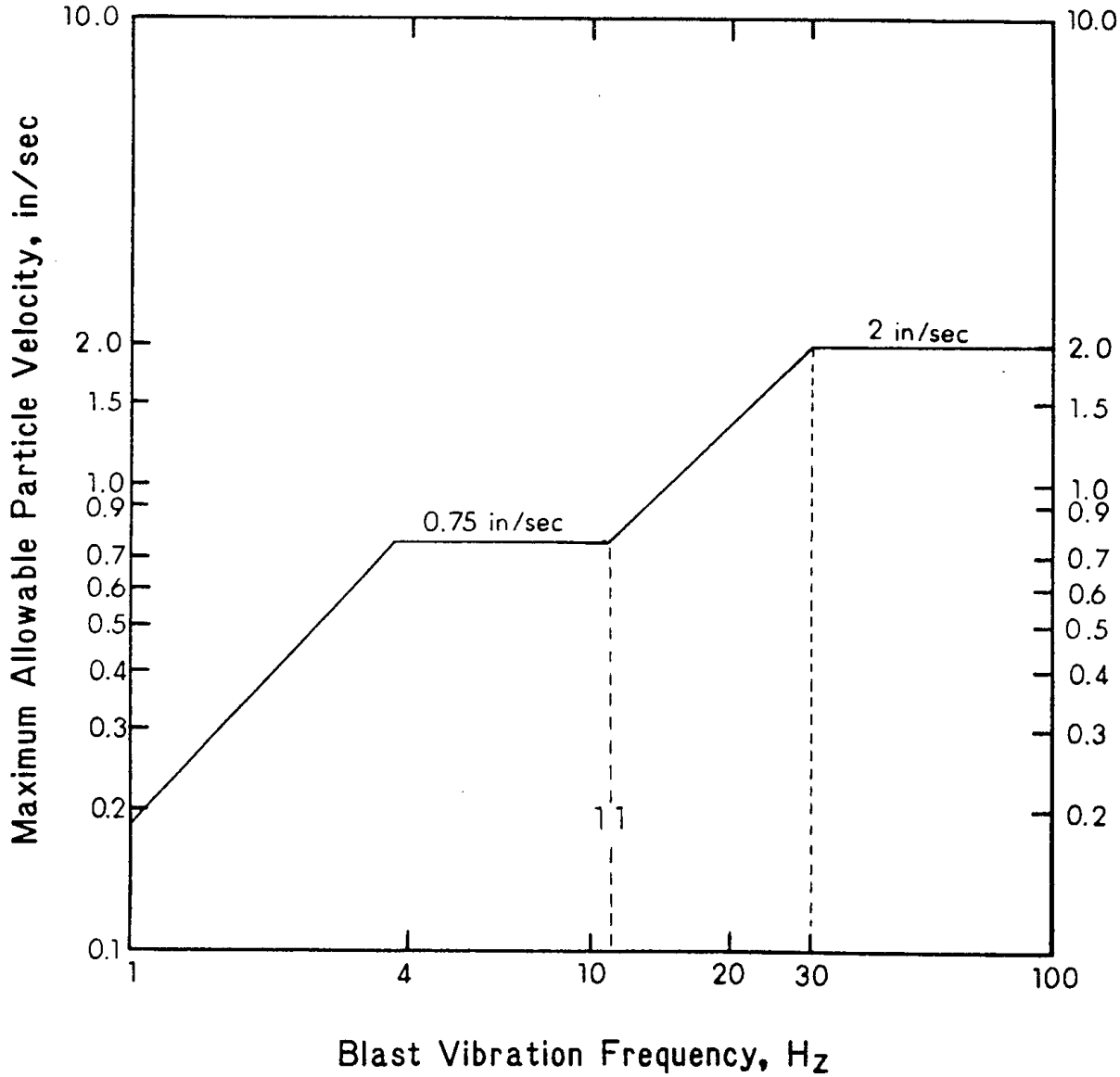

It is the certified blaster's responsibility to design the blast with sufficient burden and stemming to prevent flyrock or other dangerous effects. Blasters must give careful consideration to:

1. Evaluation of geologic conditions of material to be blasted;
2. Design of drill pattern;
3. Design of detonation sequence;
4. Calculation of powder factors for variable burden on front row of boreholes;
5. Compliance with ground vibration and air overpressure limits imposed by DMM or local government;
6. Sensitivity of neighbors to effects (noise/vibration) of blasting;

7. Use of good judgment by the blaster when using the arts/sciences of blasting.
8. Blasting has been, and continues to be, both an art and a science that relies heavily upon good judgement by the certified blaster in charge.

The mineral mine community in Virginia has experienced numerous flyrock incidents since March 2005. All of these incidents had the potential to cause serious personal injury to mine workers and citizens. Fortunately, no one was injured, though significant property damage (vehicles and structures) did occur in each of these incidents. The occurrence of flyrock can be considered an "imminent danger", and result in the issuance of a Closure Order to the operator.

Blasters now have a wide variety of initiation devices and explosive products that allow for safe, effective blasting. The certified blaster is responsible for safe blasting. He must carefully evaluate the conditions, design the shot, supervise the loading, and ensure the safety of miners and the public during detonation.

SECTION 6

STATE LAWS AND REGULATIONS APPLICABLE TO SURFACE BLASTING CERTIFICATION

This page intentionally left blank.

SECTION 6 – STATE LAWS AND REGULATIONS APPLICABLE TO SURFACE BLASTING CERTIFICATION

- Mineral Mine Safety Laws of Virginia
- Safety and Health Regulations for Mineral Mining

[This section is designed to assist the prospective surface blaster in study and preparation for certification. Much of the knowledge necessary for the blaster certification examination as well as practical applications in blasting operations are detailed in two documents (1) The Mineral Mine Safety Laws of Virginia and (2) Safety and Health Regulations for Mineral Mining. You will need to study/use these two documents directly in familiarizing yourself with their content. A summary of the main areas you should focus on follows in an effort to condense and clarify the points of information that are most important.]

STATE LAW AND REGULATIONS APPLICABLE TO SURFACE BLASTING CERTIFICATION

Applicable Areas of the Mineral Mine Safety Act

Certified Surface Blasters need to possess a general knowledge of the Virginia Mineral Mine Safety Act in order to understand and comply with the laws as they apply to mineral mining operations and to safety and health considerations. Specifically, Certified Surface Blasters should be knowledgeable of the mineral mining laws as they apply to their certification, duties, and responsibilities.

It is advisable for any individual who plans to obtain certification as a Surface Blaster-Mineral Mining to study and acquaint themselves fully with the following Articles under Chapter 14.4:1 of Virginia's Mineral Mine Safety Act. **(You should refer directly to the Mineral Mine Safety Laws of Virginia – specific Articles and Sections – for study.)**

Main Points – Mineral Mine Safety Laws
(Pages cited refer to the 2012 Edition of the Law Book)

Article 1: General Provisions.....***pgs. 10-16***

- Definitions (*pgs. 10-14*)*
- Persons not permitted to work in mines *(pg. 14)*
- Prohibited Acts by Miners or other persons; miners to comply with Law (*pg. 15*)
- Safety Materials and Supplies (*pgs. 15*)
- Notifying Miners of Violations; Compliance with Act (*pg. 15-16*)

Definitions* - Know the terms and their meaning as used in the Laws (these same terms also apply as used in the Safety and Health Regulations for Mineral Mining)
surface blasters will not be held responsible for knowing Underground Mining terminology

Surface Blasting Certification applicants should be familiar with certain areas of Article 1 -- General Provisions, including the standards concerning safety and health of miners, persons not permitted to work in mines, prohibited acts by miners and miners' compliance with laws, safety materials and supplies requirements, and notification of miners of violations and compliance with the Act.

Article 3: Certification of Mineral Mine Workers.....***pgs. 17-23***

- General Knowledge and Understanding of entire Article is Advisable
- Special attention to Revocation of certificates (*pg. 21*)

Surface Blasting Certification applicants need to have general knowledge of Article 3. ***Please note that the Board of Mineral Mining Examiner's was eliminated by the Governor in 2012. Sections 45.1-161.291:15 through 16, 18, and 23 were repealed/deleted from the Act. Sections 45.11-161.292:19 through 22, and, 24 through 29 were modified by replacing the***

references to the Board of Mineral Mining Examiner's with the Department (i.e., the Department of Mines, Minerals and Energy). This Article also covers certifications required of certain persons employed in mineral mines, certification examinations (and exam fees), penalties under the law for performance of certain tasks by uncertified persons, certification reciprocity, and renewal requirements and reexamination procedures. Specific Sections of this Article address requirements for General Mineral Miner Certification and Foreman Certification.

<u>Article 4: Licensing of Mineral Mines</u> .....*pgs. 23-30*

- Independent Contractor Information Required (which includes contract blasters and drillers) to be filed on license application (Item 3 under section 45.1 –161.292.32.A. (*pg. 25*))
- Making false statements; penalty (*pg. 30*)

Attention should be given to this Article, mainly for an understanding of Section 45.1.161.292:39, which addresses "Making false statements; penalty." This section could apply in any situation where duties, information, or records are applicable in a certified blaster's capacity.

<u>Article 6: Mine Explosions; Mine Fires; Accidents</u> .....p*gs. 33-35*

- General Knowledge and Understanding of Entire Article is Advisable
- Special Attention to Operator's reports of Accidents; investigations and reports of other accidents and injuries (*pgs. 34-35*)

Surface Blasting Certification applicants need to know the State requirements for mineral mines applicable to reporting mine explosions, mine fires, and accidents. Responsibilities of mine operators involving investigations, reports, and records are defined in Article 6. Duties of mine inspectors and procedures that apply to the Division of Mineral Mining related to these topics are also outlined in this Article.

<u>Article 7: Mine Inspections</u> .....*pgs. 35-39*

- General Knowledge and Understanding of Entire Article is Advisable

This Article contains numerous requirements that a Certified Surface Blaster applicant should generally be aware of. Mine inspection frequencies, risk evaluations at mineral mines, duties of operators and inspectors related to mine inspections and denial of entry (of mine inspectors) standards are major areas of importance in Article 7.

<u>Article 8: Enforcement and Penalties; reports of violations</u>.....pgs. *39-43*

- General knowledge and Understanding of Entire Article is Advisable
- Pay close attention to requirements under Notices of Violations (45.1-161.292:63.B.) – *pg. 40* and Reports of Violations (45.1-161.292:70.) – *pg. 43*

Article 8 details laws relating to DMM's issuance of Notices of Violations and Closure Orders and how the process works, including such items as tolling time for abatement of violations, injunctive relief, penalty for willful violation of the provisions, prosecution of violations, and reports of violations. All of the preceding items represent areas of the law that a Certified Blaster applicant will want to review and understand in the process of becoming certified.

Article 9: Miner Training.....***pgs. 43-44***

- Mineral mining safety training program (*pgs. 43-44*)

As a Certified Surface Blaster applicant, there are requirements in the area of Miner Training that you should be aware of. In addition to the General Mineral Miner certification previously covered in Article 3, Article 9 outlines requirements for safety training programs (plans) for new miner, newly-employed experienced miners, training of miners for new tasks, annual refresher training, and hazard training. Knowing the training required and to whom it applies is information all certified persons should be familiar with. **Each mine operator and independent contractor must have a safety training plan that contains the elements listed in 45.1-161.292:73**.

Applicable Areas of the Safety and Health Regulations for Mineral Mining

Main Points – Virginia Division of Mineral Mining's Safety and Health Regulations

Title 4 (Conservation and Natural Resources) of Virginia's Administrative Code contains the Department of Mines, Minerals and Energy's Division of Mineral Mining's Safety and Health Regulations. Chapter 40 contains 16 Parts, 14 of which apply to both surface and underground mineral mining operations. Part XV is applicable to underground mines only and Part XVI addresses Mining near Gas and Oil Wells. Also incorporated into the Mineral Mining Safety and Health Regulation Booklet is Chapter 35 of the Virginia Administrative Code – this contains rules of the Department addressing the Certification Requirements for Mineral Miners (formerly the Board of Mineral Mining Examiners' requirements. The Board was eliminated by the Governor in 2012).

Because your main objective is to prepare to become certified as a Surface Blaster, the most important Parts of the Safety and Health Regulations (for this purpose) are Part VI – Explosives, and Part VII – Drilling. Because these relate directly to the subject of blasting, you will want to know every detail for exam purposes and more importantly, so you can maintain compliance with the regulations at the mine once you become certified.

A large percentage of the other Safety and Health Regulations are also important knowledge for the certified surface blaster. On the practical side, every single requirement exists because of operational or safety related problems, accidents, or injuries that have occurred when rules such as these were not followed.

In summary, many of the regulations are specific to drilling and blasting and apply directly to the work and practices that a certified surface blaster performs (or oversees). Many other regulations may apply indirectly, and simply address sound operational, health and safety, and accident prevention practices that are pertinent to everyone who works in the mineral mining industry.

- **Chap. 35 – Certification Requirements for Mineral Miners**

Chapter 35 is contained in the 2012 edition of the Safety and Health Regulations. These requirements stand alone and represent all specifics concerning who, how, and what is necessary to become certified by the Department. These regulations are current as of July 2012. A complete copy of the Certification Requirements for Mineral Miners may be obtained at the following link: http://leg1.state.va.us/000/reg/TOC04025.HTM#C0035.

Part I of Virginia's Certification Requirements for Mineral Miners clearly defines all specifics for becoming certified; including examination requirements, reciprocity, and renewal of certifications.

Part II addresses Minimum Certification Requirements in the different certification areas required by the Department. These include Underground Foreman, Surface Foreman, Surface Foreman-Open Pit, Surface Blaster, Underground Mining Blaster, Mineral Mine Electrician, Mine Inspector, and General Mineral Miner.

Prospective Surface Blasters will want to be familiar with these regulations in general, and will be exposed to the requirements and processes as they apply for their certification and continued renewals through their careers.

- **Chap. 40 – Safety and Health Regulations for Mineral Mining**

The Safety and Health Regulations for Mineral Mining were updated in July 2012. A copy of the complete Safety and Health Regulations may be obtained at the following link: http://leg1.state.va.us/000/reg/TOC04025.HTM#C0035.

Part I – General Administrative Provisions

4 VAC 25-40-10 – Definitions

Reminder: Terms defined in Title 45.1- Article 1 of the Mineral Mine Safety Laws that are used in the Safety and Health Regulations retain their meaning. These terms are not listed and defined again in the definitions section of the regulations, but you will be responsible for knowing them from your study of the Laws.

The following are all important terms to know, as listed and defined in Part I of the Safety and Health Regulations, as you prepare to become a certified surface blaster: (terms specific to blasting are in **bold print** for emphasis)

"Abandoned mine"	"Flash point"	"Rollover protection"
"Abandoned workings"	**"Free-face"**	**"Safety fuse"**
"Acceptable"	**"Flyrock"**	**"Safety hazard"**
"Angle of repose"	**"Heavy duty mobile equipment"**	**"Scaled Distance (Ds)"**
"Blast area"	"Hoist"	"Scaling"
"Blast site"	**"Loaded"**	**"Stemming"**
"Burden"	"Major Electrical Installation"	"Substantial Construction"
"Company official"	**"Misfire"**	"Suitable"
"Department"	"MSHA"	"Switch"
"Director"	"Occupational Injury"	"Travelway"
"Division"	**"Overburden"**	**"Wet drilling"**
"Escapeway	"Potable"	
"Face" or "bank"	**"Powder chest"**	
	"Primer"	
	"Refuse"	

<u>Generally, surface blasters should be aware of the following Safety & Health Regulations, also found in PART I:</u>

4 VAC 25-40-25 – Purpose and Authority

4 VAC 25-40-40 – Certification

4 VAC 25-40-50 – Duties of Mine Operators

4 VAC 25-40-70 – Approval Procedure

4 VAC 25-40-90 – Documents Incorporated by Reference

<u>Part II– General Safety Provisions</u>

There are a number of items in Part II of the Safety & Health Regulations that Certified Surface Blasters should be know. From the standpoint of your prospective role as a certified person who may supervise others on the mine site, or in order to have a working knowledge of the regulations as they apply to safety and training requirements, the following sections should be reviewed and understood:

4 VAC 25-40-100 – Employee Training

4 VAC 25-40-110 – Inexperienced Employees

4 VAC 25-40-120 – When Foreman Required

4 VAC 25-40-130 – Examination by Foreman

4 VAC 25-40-140 – First Aid Training for Foreman

4 VAC 25-40-145 – Inspection of Mobile and Stationary Equipment

4 VAC 25-40-150 – Assignment of Persons to Hazardous Areas

4 VAC 25-40-160 – Emergency Medical Assistance

4 VAC 25-40-170 – Emergency Telephone Numbers

4 VAC 25-40-180 – Emergency Communications Systems

4 VAC 25-40-190 – Compliance with Regulations

4 VAC 25-40-200 – Illumination Requirements

4 VAC 25-40-210 – Cleanliness

4 VAC 25-40-220 – Water Supplies

4 VAC 25-40-230 – Toilet Facilities

4 VAC 25-40-250 – Use of Intoxicating Substances

4 VAC 25-40-260 – Posting Hazards

4 VAC 25-40-280 – Horseplay Prohibited

4 VAC 25-40-330 – Proper Use of Machinery

4 VAC 25-40-350 – Repairing Machinery

4 VAC 25-40-360 – Maintaining Machinery

Part III – Ground Control

Certain regulations relating to Ground Control requirements have implications to blasting operations, therefore a certified blaster should know the basic content of Part III of the Safety and Health Regulations. These sections should be reviewed in order to understand the requirements and their practical application relating to proper operational and safety practices:

4 VAC 25-40-390 – Stability Requirements

4 VAC 25-40-400 – Open Pit Mine Rims

4 VAC 25-40-410 – Benches

4 VAC 25-40-420 – Scaling Hazardous Areas

4 VAC 25-40-430 – Hazardous Conditions

4 VAC 25-40-440 – Installation of Rock Bolts

4 VAC 25-40-450 – Correction of Unsafe Conditions

4 VAC 25-40-460 – Examination for Unsafe Conditions

4 VAC 25-40-470 – Keeping Clear of Equipment

4 VAC 25-40-480 – Trimming of Faces

Part IV – Fire Prevention and Control

Part IV also contains some requirements that a certified blaster should be familiar with. Fire Prevention, protection, and control in mineral mining are extremely important considerations for all miners. Again, because of leadership and operational responsibilities that fall on the shoulders of the Certified Surface Blaster, the following sections of Part IV of the Health and Safety Regulations should be reviewed thoroughly:

4 VAC 25-40-490 – Smoking Near Flammable and Combustible Materials

4 VAC 25-40 500 – Warning and Evacuation Procedures

4 VAC 25-40-520 – Storage of Flammable Materials

4 VAC 25-50-560 – Solvents

4 VAC 25-40-570 – Waste Materials

4 VAC 25-40-580 – Use of Flammable Liquids for Cleaning

4 VAC 25-40-610 – Fire Equipment

4 VAC 25-40-630 – Training and Practice Drills

4 VAC 25-40-640 – Firefighting Assistance

4 VAC 25-40-670 – Fire Extinguishers

Part V – Air Quality and Physical Agents

All Sections

Airborne contaminant exposure limits, dust source control, silica compounds limitations and noise exposure limits are addressed in Part V of the Safety and Health Regulations. This brief Part, in its entirety should be reviewed for understanding, as it does have implications to surface blasting practices at mineral mine sites.

Part VI – Explosives

All Sections (**Note that significant changes went into effect July 8, 2009; Note also that 4 VAC 25-40-900. Total Weight of Explosives was repealed effective September 26, 2013 as part of the Governor's Regulatory Reform Initiative**.)

Part VII – Drilling

All Sections (Note that significant changes went into effect July 8, 2009; Note also that the following regulations were repealed effective September 26, 2013: 4 VAC 25-40-950, 4 VAC 25-40-970, 4 VAC 25-40-1040, 4 VAC 25-40-1180 as part of the Governor's Regulatory Reform Initiative. These regulations are covered under other sections of the S&H Regulations.)

Review and be knowledgeable of every detail of all sections of Parts VI and VII of the Safety and Health Regulations. These regulations address requirements in the certification area that you are seeking and every single item is important, in terms of potential examination material and the practical knowledge necessary to perform as a Certified Surface Blaster. There were significant changes to Parts VI and VII that went into effect July 8, 2009.

Part VIII – Compressed Air, Gases, and Boilers

Certain sections of this Part VIII of the Safety and Health Regulations should be reviewed. While direct applicability to blasting is minimal, you should be aware of the following sections:

4 VAC 25-40-1100 – Boilers and Pressure Vessels

4 VAC 25-40-1110 – Air Compressors

4 VAC 25-40-1120 – Compressed Air Receivers

4 VAC 25-40-1190 – Repairs

4 VAC 25-40-1200 – Improper Use of Compressed Air

4 VAC 25-40-1210 – Locking Devices

Part IX – Mobile Equipment

It is difficult to work at a surface mineral mine without operating or otherwise interacting in some way with the use of mobile equipment of some type. Nationally, and in Virginia, mobile (powered haulage) equipment accidents continue to be one of the leading

causes of serious injuries and fatalities in the mineral mining industry. For these reasons it is advisable for certified surface blasters to familiarize themselves with certain standards contained in the Safety and Health Regulations.

4 VAC 25-40-1320 – Brakes on Mobile Equipment

4 VAC 25-40-1330 – Emergency Brakes

4 VAC 25-40-1340 – Requirements for Starting or Moving Equipment

4 VAC 25-40-1350 – Construction of Operators' Cabs

4 VAC 25-40-1370 – Safety Equipment

4 VAC 25-40-1380 – Extraneous Materials in Cabs

4 VAC 25-40-1390 – Operating Speeds

4 VAC 25-40-1410 – Restraining Berms or Guards

4 VAC 25-40-1420 – Operation under Power Control

4 VAC 25-40-1430 – Maintaining Control of Equipment

4 VAC 25-40-1460 – Prohibited Means of Transportation

4 VAC 25-40-1470 – Securing Equipment in Travel Position

4 VAC 25-40-1510 – Setting Brakes

4 VAC 25-40-1540 – Traffic Rules

4 VAC 25-40-1550 – Heating and Cooling Cabs

4 VAC 25-40-1570 – Audible Warning Devices

4 VAC 25-40-1580 – Backup Alarms

4 VAC 25-40-1600 – Avoiding Mobile Equipment in Operation

Part X – Personal Protection

All Sections

Proper personal protective equipment for miners is an important safety measure. As a certified person who may be in charge of other workers, it is important that you understand such requirements and assume responsibility for assuring that all personnel are using (wearing)

proper Personal Protective Gear that is in good and functional condition. These include such basic items as safety harnesses, hard hats, protective footwear, safety glasses or goggles, and gloves.

Part X has other related requirements that address personal protection, including sections that cover First Aid material availability, finger ring(s) prohibition when working with tools/equipment, light reflective material requirements for night visibility of persons, loose clothing hazards and protection from falling (or engulfing) material at dump sites.

While all sections of Part X may not apply directly to blasting work, there are numerous important items that apply to all miners. ***Review and be knowledgeable of all requirements in Part X***.

This page intentionally left blank.

APPENDIX

I. Blasting Related Accident Abstracts

   a. Injury/Fatality Cases
   b. Flyrock Incidents
   c. Certified Blaster Serious Injury

II. Associated Articles

III. Example Record Forms

IV. Suggested Blasting Equipment Lists

V. Safety Talk Outlines/Summaries

VI. Flyrock Prevention Communication Memorandum, November 29, 2006

VII. DMM Flyrock Alerts

   a. Safety Alert: Flyrock Impacting Highways, August 2013
   b. Flyrock Hazard Alert, November 2006

VIII. Bibliography

Abstract of Blasting Accident at XYZ Corp.

On January 19, 1993 a utility worker, at a sandstone quarry, was injured when the front end loader he was operating was struck by material from a blast. The day of the blast the victim was hauling sand from the face to the pump monitor. The blasting contractor was new to the mine, and had come on site to load, and initiate their first blast at the site. The plant manager had shown the contractor the drilled shot, and later that morning the plant manager, and safety supervisor went to the blast site to check on the progress of the loading. The blasting contractor gave the safety supervisor a two-way radio for coordinating the blast when they were ready. At approximately 10:20 a.m. the blaster called the safety supervisor, and told him they were ready to shoot. The safety supervisor followed his normal routine of telling the purchasing agent to begin notifying the neighbors of the blast, and then left to go and set up the seismograph. The safety supervisor, and a contractor employee, both set up their seismographs, called the blaster on the radio, and told him to go ahead and detonate the blast. After one aborted attempt, the blaster detonated the blast. Two quarry workers had not been removed from the blast area, and were in the pit when the blast went off. The blaster had failed to clear the blast area before initiating the shot. The safety supervisor had assumed that the blast area was cleared, but had not asked the blaster to make sure.

.

Premature Detonation of Explosives Accident

On February 14, 1994 a premature detonation of explosives occurred at an open pit rock quarry. The blaster had completed loading the previously drilled shot, including making up the surface connections of the non-electric detonating system in use by the operator. The mine routine was to utilize an electric cap to initiate the non-electric system; therefore, the blaster went ahead and hooked the electric cap to the non-electric system. The blaster then hooked the firing line to the electric cap, and pulled the line back to the blasting shelter. After checking for continuity with a Blaster's ohmmeter the blaster then connected the firing line to the blasting machine, and pushed the button to charge the condenser. The blaster noted that the blasting machine indicated that it was ready to fire, and at that point the blaster heard someone coming toward him in a pickup truck. The blast then allegedly fired without the fire button being pushed. The blaster had failed to clear the blast area of personnel prior to connecting the shot to the initiating system. Two truck drivers, and the mine foreman were in the blast area, but fortunately were uninjured as a result of the premature detonation of the shot. The investigation found that the training of the blaster was deficient, which contributed to the accident.

Blast Fatality Abstract #1

On May 23, 1994 a laborer/crane operator was fatally injured when he was struck by flying material generated from a blast. The victim had assisted in the loading, and stemming, of the shot in the multiple bench limestone quarry. The one row of 41 holes in the shot were 12 feet deep, had 3 feet of stemming, and were covered with a woven mat. The victim, and the blaster were standing on the bench above the loaded blast, and were located approximately 120' behind the shot. When the blast was detonated, a piece of flyrock struck the victim in the back. He was taken to the hospital, and died later that day as a result of the injuries. Neither the victim, nor the blaster took shelter prior to detonation of the blast. Their distance from the blast was insufficient to protect them from flying materials generated by the blast.

Blast Fatality Abstract #2

On May 8, 1996 a truck driver/laborer, employed by a blasting contractor, was killed by a premature detonation of an explosive primer. The victim had reported to work at the open pit quarry at his regular time, and had begun to assist fellow contract blasting employees with loading a blast. The victim proceeded to the rear of the blasting truck to make up some additional primers. The primers being used consisted of a nonelectric detonator inserted into the cap well of a cast booster. At approximately 9:20 am the other members of the crew heard, and saw, an explosion at the rear of the blasting truck. They ran to the truck to find the victim dead of massive injuries to his abdomen and torso. A hole blown in the truck's bumper indicated that the victim had been making up a primer on the bumper at the time of the explosion. Two coworkers stated that they had witnessed the victim on two previous occasions using a knife to tap a detonator into a primer, and had warned him against the practice. A wood handled knife, found on the ground about 10' from the victim, caused investigators to suspect that the victim may have been trying to force the detonator into the cast booster.

Premature Blast Accident Abstract

On January 2, 1987, a blasting primer exploded while drill holes were being loaded in preparation for a shot, seriously injuring the certified blaster.

<u>An investigation of the accident by the Virginia Division of Mineral Mining revealed the following:</u>

- The certified blaster, with the assistance of the driller, was loading an 8 hole shot. Apparently, as a primer was being lowered into the 7th hole, it came loose, dropped down the hole and exploded.

- The holes were 3 1/2" in diameter and 30' to 60' deep. 8 holes were drilled in a row on a 35-degree angle, 6' apart. 3" X 16" Tovex, ANFO, and a Detaline firing system was being used.

- Primers were being made up one at a time, with each hole being loaded and stemmed prior to moving to another hole. The caps were being placed on the Detaline by running it through the eyes on the top of the cap (as recommended by the manufacturer). The Detaline booster was placed around the cap and inserted into the package of Tovex and a half hitch was used to secure the package to the Detaline.

- 6 holes had been loaded and the driller was lowering the primer down the 7th drill hole when the line went slack approximately 25' down. (The driller stated that packages of Tovex had come loose several times in the past and the cap had remained on the line, and they had placed it in another package of Tovex and continued without problems). So, the driller turned to pick up another package of Tovex, and then he heard the explosion. He looked around and saw the certified blaster on the ground, with his hands covering his eyes. (The injured blaster received multiple burns and trauma to his eyes and face; he had been virtually over the hole with the angle of the drill hole. The injured blaster was released from the hospital on 1/4/87, but continued to have sight problems in his left eye).

- Questions were raised regarding the practice of placing the primer in the bottom of the hole…and it was stated that that sometimes they did this, and sometimes they put some explosives down first, depending on the condition of the hole and the amount of explosives to be used. The driller stated that in this case the hole was clear and the primer did not hang on anything going down. The piece of Detaline used in the hole was checked and it appeared to have been cut about ¾ away around and torn the rest of the way.

- <u>Conclusions</u>
  The Detaline is believed to have been damaged or cut prior to being placed in the hole or possibly cut when it was passed through the eyes on top of the cap. Subsequently, the line did not support the weight of the package of Tovex and the

cap fired and initiated the blast when it dropped approximately 35’ and hit the bottom of drill hole. No Violations of Virginia Mining Laws or Regulations was indicated.

It was recommended that some explosives should be placed in holes before the primers to act as a cushion in case the primer is dropped; and also that no whole or heavy packages of explosives are dropped directly on top of the primers.

It was recommended that a portable reel stand made of non-sparking material should be used to keep the Detaline off the ground and prevent damage.

It was also recommended that tape be used to seal the cap in the packages of explosives and to secure the line to the package (to relieve tension where the line passes through the eyes on the cap).

It was recommended that no person stands over or looks down the drill hole when explosives are being loaded.

FLYROCK ABSTRACT
CASE #1

In 1991 a granite quarry (located in Virginia) set off a shot that generated flyrock causing serious/major damage to two (2) homes, a garage, boat, basketball goal, along with other miscellaneous damage. The damaged neighborhood was approximately 2000' (ft) distance from the shot location and people were close-by. A rock weighing approximately 17 lbs. and measuring 6" x 71/2" x 41/2" had gone through the wall of one house doing considerable damage to the wall and furniture inside. The second residence/home had a rock go through the outer brick wall and lodge in the inside wall. The picture window was broken, there was inside wall damage, and a bookcase sitting against the wall was damaged with litter around the room from the bookcase. Another rock had gone through the garage and exited through the opposite end of the building doing considerable damage.

The shot was designed using a laser transit. The shot pattern was 13' x 16' with bore holes at a depth of 44', 3' of sub-drilling, 8' of stemming, 33 holes, 2 rows, with the front rows drilled at an angle. 12,887 pounds of explosives was used with a powder factor of 1.94.

A closure order was issued by the state mine inspector stopping all blasting until the investigation was complete and a new blasting plan submitted and approved by the Division of Mineral Mining.

It was of the opinion of those investigating the mishap that there was a weakness in the burden between the face and shot holes.

SEE THE FOLLOWING PAGE FOR NEWS ARTICLE AND LAYOUT

Rock Shower

Quarry blast sends rocks flying

AP photo

[redacted] looks through hole in outside wall of his home that was caused by flying rocks.

[redacted] (AP) — Several houses were damaged in a rock shower caused by a blast at a nearby stone quarry, residents of a [redacted] neighborhood said.

Officials from the state Department of Mines, Minerals and Energy were investigating the incident Wednesday, said Bill Roller, director of the Division of Mineral Mining.

Roller said [redacted] has been ordered to suspend blasting until the investigation is complete.

[redacted] said he was standing on his carport Tuesday afternoon when he heard an explosion, looked up and saw "small boulders" flying toward his house. One of the rocks destroyed a basketball goal, then smashed through the brick wall of his home about six feet from where he was standing.

The rock left a foot-wide hole visible from the outside of the house. Inside, where the rock emerged from the wall in the living room, a hole almost six feet in diameter could be seen behind a broken bookshelf. The floor was littered with books, broken ceramic and porcelain knick-knacks and trophies won by the [redacted] children.

Two other rocks knocked holes in Doss' garage roof and wall.

[redacted] area manager [redacted] said the firm is conducting its own investigation. [redacted] company doing the blasting, also was investigating, [redacted] said.

FLYROCK ABSTRACT
CASE #2

On November 3, 1989 a limestone quarry located in Virginia set off a shot that generated flyrock and excessive airblast. Twenty three (23) homes were damaged. Three (3) homes had structural damage from flyrock and twenty (2) homes had glass broken from their windows.

After inspecting the highwall, muckpile, and talking to the contract driller, it was determined that as many as five (5) holes may have fired at the same time (the blast was timed/designed for one hole to fire at a time. Cracks in the wall on one end and the driller having trouble with air coming out of several holes when he was drilling an individual hole leads one to believe that several holes were initiated at one time.

The shot was bulk loaded and cracks between the holes could have been filled with explosives. The weakness/cavities in the geological structure of the formation/rock to be shot and the failure to recognize this potential lead to this incident occurring.

The airblast for this shot was in excess of 145 decibels. Two (2) closure orders and one (1) notice of violation were issued to the mine operator. This regulatory action stopped all blasting at this quarry until a new blasting plan could be submitted and approved by the Division of Mineral Mining.

Flyrock Incident
May 4, 2000

- Occupied truck and front-end loader working in pit struck by flyrock .
- Property damage only, no personal injury.

Flyrock Accident
April 25, 2006

- Shot included 22 regular (55') holes and 13 large boulders.
- Vehicles and buildings located on the opposite side of the four-lane highway struck and damaged; a store owner was nearly struck by two large rocks.

Blaster must design shot with sufficient burden, spacing, and stemming to prevent flyrock (4VAC25-40-800.D).

Flyrock Accident
March 8, 2005

Blast site on the 7th level down.

Damage to roof and support beam.

A 45-lb rock was thrown 1,766 feet onto the roof of a commercial building.

Certified Blaster Serious Injury Accident
July 5, 2005

- Blaster fell off 40' drilled bench while checking burden on front row.
- Blaster not wearing fall protection as required by DMM regulation 4VAC25-40-1740.

SAFETY TALK

Drilling and Blasting Safety

by Robert E. Morgan

The extraction of rock and other consolidated minerals produced by the mineral mining industry usually requires the use of drilling equipment and explosives. Federal and state regulations address the safe use of various types of drills and explosive materials.

Drilling Equipment

The mine operator or independent drilling contractor must provide drillers with equipment maintained in accordance with the manufacturer's specifications and in safe operating condition. Typically this translates into pneumatic/hydraulic pressure controls, guards on moving parts, wet or dry dust control devices, and braking/steering systems for the truck or track carrier. In addition, drill steel racks and operator platforms or cabs must be maintained to protect the drill operator.

The equipment operator must conduct a pre-shift inspection of the drill prior to use each shift. This requires the person to be trained in both operations and light maintenance procedures. Any safety defect found during the pre-shift inspection must be corrected prior to use of the drill. Before starting work, the driller and helper must have appropriate personal protection equipment (PPE) such as safety glasses, safety boots, and hard hat. It is also important to remove finger rings, and any loose-fitting clothing articles that may get caught on parts on the drill.

Drilling Work Environment

Prior to starting work at the quarry bench, drillers must inspect their assigned work environment for potential safety hazards. The area must also be checked by the certified foreman. The inspection should focus on the drill bench, the free-face, and the wall or bench above or behind. Hazards such as fractures (back-break) near the edge of the bench, over-hanging rocks, or geologic conditions that create an unstable work area must be eliminated prior to the start of work. When drilling the first row of boreholes, it is important to stay a safe distance from the edge of the bench. A safety harness and lifeline may be required when measuring the free-face where back-break fractures are present. Health hazards related to silica dust and noise can be minimized by use of dust control devices and hearing protection that must be provided. Drillers should be constantly on the alert for hazards that may develop in their work environment as a result of drilling or other unrelated activities.

Communication with Blasters

The pattern of a drilled shot and the geologic characteristics of each borehole are important elements which must be taken into consideration by the certified blaster when designing the blast. The transmittal of clear and accurate drilling data to the blaster is essential for safe blasting. This can best be achieved by drillers using drill logbooks which detail general and specific borehole information to the blaster. This information allows the blaster to load the minimum amount of explosives necessary for the desired fragmentation while reducing risks (flyrock/airblast/vibration damage) and lowering production costs.

Blast Area Security

Prior to the start of loading a blast, all persons and equipment, except the loading crew, must be removed from the drill bench and free-face area (blast site). This procedure is necessary to protect other persons from the effects of a premature detonation accident. In addition, access to the drill bench and the area in front of (180 degrees) the free-face must be barricaded or guarded to prevent other persons from entering.

Once the blast is completely loaded and ready for detonation, the entire pit area (blast area) must be cleared of persons who could be injured by the effects of the blast. Blast warning signals must be established and posted to warn miners, contractors, and other persons of the ensuing blast so they can go to a designated safe area until the "all clear" signal is given. Detonation must not occur until the blaster and mine officials are assured that the blast area is clear. This may require posting guards at both mine and public roads.

Safe Storage of Explosive Materials

Federal and state regulations require explosive materials such as detonators, high explosives, and blasting agents be stored in magazines approved by the Institute of Manufacturers of Explosives (IME). Construction of such magazines can range from over-the-road drop trailers for blasting agents, to steel-covered wood or masonry magazines for detonators and high explosives. Magazines must be located in a secure area, kept locked, and inspected regularly, Any theft or unaccounted loss of inventory must be reported to state authorities and the ATF.

Transportation of Explosives on Mine Property

Vehicles used to transport explosive materials on mine property must be in safe operating condition and posted with explosives warning placards. If detonators and explosives are transported together, they must be separated by 4" of hardwood or the IME equivalent. The vehicle should not be taken to the blast site until the area is cleared of other persons and equipment. The loaded vehicle must be operated in a safe manner and not left unattended at any time. When distributing explosive materials from the vehicle, care must be taken to avoid running over loaded boreholes or explosive materials on the ground.

Safe Use of Explosives

Persons who do blasting at mineral mines must be certified in many states. The certified blaster must be in direct charge of blasting activities, and is responsible for designing blasts which produce the desired fragmentation with the least potential for flyrock or other dangerous effects. The following requirements are important to ensure safe blasting:

- Persons who assist the blaster must be trained in the materials and methods being used.
- Blast site must be cleared prior to start of loading.
- Blast area beyond the blast site must be cleared prior detonation.
- Blast site must be free of safety hazards.
- Boreholes must be cleared of obstructions prior to start of loading.
- Weather conditions must not pose a hazard to loading crew.
- Detonators and high explosives must be kept separated until they are ready to be placed in borehole.
- Smoking is prohibited within 50 feet of loading area.
- Blaster must design blast to comply with limits for ground vibration and airblast.

A careful analysis of geologic conditions of material to be blasted and the implementation of the above safeguards will ensure the safety of persons at the mine, and minimize impact of blasting on neighbors.

Blasting Restrictions - Airblast and Ground Vibration

State regulations often establish limits for airblast and ground vibration measured at inhabited buildings not owned or leased by the mine operator. Ground vibration limits are based upon the method of compliance chosen by the mine operator. There are three methods to choose from:

1) Mine operator measures airblast and ground vibration by use of seismograph for each blast to assure airblast does not exceed 129 decibels and that ground vibration (peak particle velocity) does not exceed 1.00 inches per second (ips) at a distance of 301-5000 feet from blast site; or 1.25 ips at 300 feet, and .75 ips at more than 5,000.

2) Mine operator, who does not have a seismograph, uses the maximum charge weight per delay period method to calculate the maximum pounds of explosives that can be detonated on the same delay cap period. This method requires the certified blaster to take into careful consideration the distance to the nearest neighbor, and the scaled distance factor contained in DMM regulations.

3) The mine operator use an approved alternative blasting limit determined for each blast based upon frequency analysis of ground vibration waves produced by the blast. Using this method can result in limits that may be higher or lower than the usual 1.00 ips.

It is important that the mine operator inform the contract blaster responsible for designing the blast the method of compliance being used, or any other restrictions imposed by local authorities.

Public Relations with Neighbors

Blasting produces ground vibration and airblast which can result in structural response at off-site buildings. This perceived motion can be very disturbing to homeowners. Therefore, it is advantageous to establish good public relations with nearby neighbors. Most homeowners mistakenly believe that any motion of window glass or house structure originates from ground vibration striking the foundation of the house; when in fact the concussion element of airblast is often the culprit. DMM safety & health regulations establish maximum limits for both ground vibration and airblast based on comprehensive studies conducted by the U.S. Bureau of Mines (USBM).

Mine operators often receive blasting complaints from neighbors even though they are well within ground vibration and airblast limits. This can often be attributed to the fact that most homeowners are not knowledgeable about blasting; therefore, their concerns may be alleviated by meeting with them to discuss how blasts are designed to minimize effects, and how structure response from blasting compares with other sources such as closing doors, loud traffic, etc. In addition, mine operators can request technical assistance from their explosives distributor or state regulatory agency to address blasting concerns by neighbors.

As a Virginia state mine inspector, Robert E. Morgan deals with all aspects of explosives, enforcement of state laws and regulations, citizen blasting complaints, investigation of blasting accidents, development of blaster training and certification curriculum, and promulgation of state mining regulations related to explosives and blasting. He has a Bachelor's degree in management of mining sciences, and received his initial training in tactical use of explosives in 1967 at the U.S. Army's Officer Candidate School, Ft. Knox, KY. He is an ISEE member and has made numerous technical presentations at various chapter seminars and conferences.

Blasting continues to be both an art and a science, relying heavily upon good judgement by the blaster in charge

Flyrock— a blaster's worst nightmare

By Robert E. Morgan

Over the years, the mining industry has developed many terms to describe various processes or events associated with the production of minerals.

Of all these terms, however, few can provoke the degree of nightmarish images as does the dreaded term—***flyrock***. The high degree of anguish brought about by the term is justified by the high potential for property damage or personal injury normally associated with uncontrolled flying material generated by a blast.

For the blaster in charge of the blast and and the mine operator who assumes overall responsibility, the mention of the word conjures visions of long, costly confrontations with adjoining property owners and regulatory agencies.

In recent years, the explosives industry has developed many products that improve fragmentation and overall safety. But, a safe and effective product is only one half of the equation. Blasters who use the products must ensure that they are used safely and effectively.

A recent analysis of blasting incidents in Virginia revealed that flyrock often occurred as a result of:

- shallow boreholes used to eliminate toe on the face
- insufficient stemming of boreholes
- inadequate burden around boreholes drilled at an angle

For the Blaster in charge, the mention of flyrock conjures images of confrontations with neighbors and regulatory agencies

Possible causes

Shallow boreholes (snake holes) used to break toe on the face can often be eliminated by increasing the amount of subdrilling in the front line boreholes and loading the bottom portion with a high density explosive product.

The risk of flyrock resulting from insufficient stemming of boreholes can normally be eliminated by ensuring a 1:1 ratio of borehole stemming to burden.

Flyrock resulting from inadequate burden was the culprit in many incidents where rock was thrown in excess of 1,000 ft with subsequent property damage.

In most instances, angled boreholes were used in the front row of the shot. When angled boreholes are used, there is often an increased risk of flyrock from inadequate burden.

Contributors to flyrock

- angled boreholes
- shallow boreholes
- inadequate burden
- insufficient stemming
- overloaded boreholes
- secondary blasting of boulders

The risk can be significantly reduced by changing the direction of face development when mining an inclined stratum. In most cases, better fragmentation and ground control can be achieved by blasting perpendicular to the strike plane of the stratum.

If angled boreholes must be used, burden should be accurately measured by mechanical means (burden pole) or by the

As a representative of Virginia's mine safety/reclamation enforcement agency, Robert E. Morgan enforces state blasting regulations, investigates blasting complaints and teaches explosives safety and blaster certification classes. He also developed the agency's blaster training course and served as chairman of the state's advisory committee on explosives.

newly introduced laser profiling system. Using techniques that minimize the risk of flyrock is only one factor that must be taken into account by the certified blaster.

A successful blast is the culmination of several important factors that must be taken into consideration including:

- **evaluation of the rock strata**
- **design of the drill pattern**
- **design of the detonation sequence**
- **calculation of powder factors**
- **compliance with state and/or federal blasting regulations**
- **sensitivity of adjoining property owners**
- **good judgement by the blaster in charge**

A miscalculation or flawed judgement by the blaster in any of these factors may produce a highly undesirable result—flyrock.

To prevent flyrock or other undesirable effects, operators must ensure that their blasters are competent in all factors relating to both drilling and blasting. This is the reason that Virginia, and some other states, have adopted regulations requiring training and certification of blasters.

The focus of any blaster's training and certification program must be directed toward designing a blast that produces the desired fragmentation with the least potential for personal injury or property damage.

Virginia, and other states, have adopted regulations requiring training and certification of blasters

Unfortunately, we can never totally eliminate the potential for error in any given situation, but the blasters in charge must assure themselves that they have considered all relevant factors and designed the blast to the best of their ability. When this has been accomplished, the chance of error is greatly diminished and overall safety improved.

There is also an obligation for the regulatory agency with the responsibility of investigating accidents involving flyrock or explosives in general. The investigation should focus on the cause of the incident and specify the preventive measures based on sound blasting practices. In most instances, the cause of flyrock will be the design or loading factors used in the particular blast.

And finally, the information relating to the cause of flyrock and preventative measures must be disseminated to other blasters in the mining industry in order to prevent a similar occurrence. The investigation report should serve as a vital educational link in the agency's effort to reduce blasting accidents.

As with most accidents, the nightmare of flyrock can best be avoided by using prevention techniques in all stages of the blast: **planning, drilling, loading** and **detonation**.

Blasting has been, and continues to be, both an art and a science which relies heavily upon good judgement by the blaster in charge. ■

Wild Flyrock

Mine	*Rock*	*Distance*	*Powder Factor*	*Possible Cause*
Conklin quarry	limestone	3,063.6 ft	0.45 lb/yd^3	Overloaded holes (?)
Sibley quarry	limestone	1,159.2 ft	0.9 lb/yd^3	Undetermined
Roberta quarry	limestone	4,057.2 ft	~1.7 lb/yd^3	Undetermined
Falling springs quarry	limestone	5,050.8 ft	0.7 lb/yd^3	Fissures; also marginal stemming
Okalona quarry	limestone	4,057.2 ft	[a]	Overloaded holes
Oglesby quarry	limestone	6,292.8 ft	[a]	Undetermined
Latah quarry	trap rock	828.0 ft	0.68 lb/yd^3	Undetermined[b]
Mine O	taconite	11,360.2 ft	1.2 lb/yd^3	Insufficient stemming
Barkely pit	porphyry	2,119.7 ft	[a]	Some holes may have partially caved in; consequently, explosive load could have risen much higher than planned
Mine A	Sandstone	1,987.2 ft	0.53 lb/yd^3	Fissures

[a] **Insufficient information to complete**
[b] **Flyrock must have originated at bench top since observed flight time is much too long for flyrock vertical face**

Source: Roth, J. (1979), "A Model for the Determination of Flyrock Range as a Function of Shot Conditions," report prepared for the U.S. Bureau of Mines by Management Services Association, Los Altos, California, NTIS, PB81-222358.

Flyrock Resulting from Surface Mine Blasting

by Robert E. Morgan
Division of Mineral Mining (DMM)

The following is a Virginia Department of Mines, Minerals, & Energy technical presentation to the Potomac Chapter, International Society of Explosives Engineers' 12th Annual Conference, October 1, 1999, in Hagerstown, Maryland.

With improved methods for designing and detonating shots, the potential for flyrock can be significantly decreased, but there are few absolutes in blasting. Blasters must learn from the mistakes of others. Blasters must conscientiously employ control measures to minimize the risk of flyrock. The worst case incidents, which tend to be widely reported by the media, should serve as a reminder to us all that minimizing the risk of flyrock must be incorporated into the design of the drill pattern and blast design.

When things go wrong in a shot, the consequence could be poor fragmentation, increased airblast/vibration, or rock thrown beyond the intended limit. If that uncontrolled material generated by the blast impacts and injures a person or private property, an investigation is initiated to determine the cause and contributing factors. Flyrock incident data collected over the years and reported in regulatory reports, trade association publications, and the ISEE Blasters' Handbook include the following conditions or practices:

- *Undetected geologic weakness in rock being blasted*
- *Excessive amount of powder for the actual burden*
- *Inadequate burden for the amount of powder*
- *Increased amount of powder in voids, crevices, mud seams, etc.*
- *Inadequate amount, or ineffective stemming, in borehole*
- *Lift/sinking shot, or over-confined shot without adequate relief*
- *Too much, or not enough, timing between holes*
- *Hole(s) firing out of sequence*

Failure of blasters to adequately address these conditions or practices can pose a risk to miners or private property owners beyond the mine. The "***bottom line***" for blasters is to design the shot in such a way as to avoid too much powder and not enough rock in order to achieve the desired fragmentation with the least potential for flyrock. The following flyrock control measures are just a sample of precautions that can be employed:

- **Adjust blasting direction and drill pattern to be consistent with specific geologic conditions**
- **Accurately measure (unequal) burden on the free face to be drilled and blasted**
- **Design the drill pattern and shot design to provide adequate burden, stemming and timing**
- **Adjust powder factor in areas of free face with variable burden**
- **Design shot in a manner that rock is not thrown beyond confines of quarry pit**

Careful consideration of the geologic condition of rock to be blasted, precise calculation of the minimum amount of powder required to achieve desired fragmentation, and minimizing adverse impact upon adjoining property owners will result in safe and effective blasting.

BLASTING REPORT RECORD

DMM Safety and Health Regulation 4 VAC 25-40-810 requires a detailed record of each blast be prepared by the certified blaster immediately after completion of each shot. The records must be kept at the mine office for 3 years.

COMPANY_____**PERMIT #**_____

Date_____ Time_____ Weather_____

Blast Location_____ Bench No._____
Material Blasted_____No. of Rows_____ Total No. of Boreholes_____
Borehole Diameter_____inches Depth of Boreholes_____feet Condition of Boreholes_____
Length of Stemming_____feet Type of Stemming_____
Burden_____feet Spacing_____feet
Distance (D) & Direction (Ds) to Nearest Inhabited Building (D)_____ (Ds)_____

Results of Seismic Test

Location_____

Vibration: L _____ in/sec _____ frequency
T _____ in/sec _____ frequency
V _____ in/sec _____ frequency
Airblast: _____ dBs _____ max allowed dBs

Lbs. Explosives Per Borehole_____ Total Lbs. Explosive Materials Used_____
No. of Holes/Delay Period (8ms)__ Max. Charge Weight Per Delay Period_____lbs.
Method Used to Determine Max. Charge Weight/Delay Period* _____W/Ds Formula**
***Seismic Monitoring must be used unless Scaled Distance, Ds, is 90 or greater.**
_____ N.A. Seismic Testing

Type & Amount of Explosive Materials Used

Manufacturer & Type of Explosive Material	Pounds of Explosive Material Used
_____	_____
_____	_____
_____	_____
_____	_____

Type Initiation System Used_____Manufacturer_____

Number of Detonators & Delay Periods Used	Delay Period
_____	_____
_____	_____
_____	_____
_____	_____
_____	_____
_____	_____
_____	_____
_____	_____

Shot Design (delay sequence & timing) and Profile of Front Line Boreholes

On back of this form diagram and specify initiation (timing) sequence, front-line borehole profiles, or any special conditions or precautionary measures used.

_____ _____

SIGNATURE OF CERTIFIED BLASTER IN CHARGE OF BLAST **CERTIFICATION #**

BLASTING REPORT

Blast No. _____

Name of Plant _____

Date _____ Time of Shot _____

Location of Blast in Quarry _____

Grid _____ Grid Map Date _____ Bench _____

Weather _____ Ceiling _____ Temperature _____ Wind From _____

Direction and Distance to Nearest Non-Company Building: Feet _____ Dir. _____

Seismograph Location A: _____

B: _____

Grid A: _____ B: _____

Stationary Seismograph Readings Max. I.P.S. _____ Frequency _____ Air _____

Shot Data

No. Holes		Explosives		
Hole Diameter		Type	Size	Pounds
Hole Depth				
Sub-Drilling				
Avg. Stem Face Holes				
Stem Other Holes				
Burden Front Line				
Burden Other Holes				
Spacing Front Line				
Spacing Other Holes				
Tons Per Cubic Yard		Total Explosives Pounds in Shot		

Type of Blasting Caps: Electric _____ Non Electric _____

Brand Name _____

In Hole Caps: Delay _____ No. Used _____ | Delay _____ No. Used _____

Surface Delay: Delay _____ No. Used _____ | Delay _____ No. Used _____

Surface Delay: Delay _____ No. Used _____ | Delay _____ No. Used _____

Total Cost of Blast _____ Tons in Shot _____ Cost Per Ton _____

Percent of Anfo _____ Percent of Fuel if Bulk Loaded _____

Avg. Explosives Per Hole _____ No. Holes Per Delay _____

Maximum Lbs. Per Delay _____ Powder Factor _____

Blaster's Signature _____ Blaster's No. _____

Superintendent or Foreman's Signature _____

BLAST REPORT

CUSTOMER NO.	SHOT NO.

CUSTOMER NAME	CUSTOMER LOCATION (CITY / STATE)

BENCH LOCATION	BLASTER	LICENSING STATE	LICENSE NO.

START TIME	END TIME	TOTAL TIME	CREW SIZE	TRUCK NO.	TRUCK NO.	TRUCK NO.	TRUCK NO.

PATTERN OK?	HOLES OK?	FACE OK?	BENCH OK?	FLOOR OK?	SIGNS OK?	SHELTER OK?	SECURITY OK?

SHOT DATE	SHOT DAY	SHOT TIME	WEATHER CONDITIONS	TEMPERATURE	WIND SPEED	WIND DIRECTION

HOLE DIAMETER	NUMBER OF HOLES	NUMBER OF ROWS	BURDEN (FT)	SPACING (FT)	AVG. FACE HEIGHT	SUBDRILLING (FT)	HOLE DEPTH (FT)

DRILLED FEET	1ST ROW STEMMING	AVERAGE STEMMING	ELECTRIC / NONEL?	SEQ. TIMER?	TIMER SETTING	DELAY / HOLE	DELAY / ROW

HOLES / DELAY	TOTAL POUNDS	POUNDS / HOLE	LBS. / DELAY	MATERIAL BLASTED	LBS. / CU.YD.	TONS / LB.

	NUMBER OF HOLES	BURDEN (FT)	SPACING (FT)	FACE HEIGHT (FT)	FACTOR	CUBIC YARDS
EST. YIELD - CU.YDS.					X 0.03704	
	NUMBER OF HOLES	BURDEN (FT)	SPACING (FT)	FACE HEIGHT (FT)	FACTOR	TONS
EST. YIELD - TONS					X 0.0____	

SEISMOGRAPH LOCATION	SEISMOGRAPH OPERATOR	TYPE OF SEISMOGRAPH	SERIAL NUMBER	CALIBRATION DATE

DISTANCE TO BLAST	DIST. TO STRUCTURE	HOW MEASURED?	TRIGGER SETTING	P.P. VELOCITY	FREQUENCY	dB (SOUND)	SCALED DISTANCE

SEISMOGRAPH LOCATION	SEISMOGRAPH OPERATOR	TYPE OF SEISMOGRAPH	SERIAL NUMBER	CALIBRATION DATE

DISTANCE TO BLAST	DIST. TO STRUCTURE	HOW MEASURED?	TRIGGER SETTING	P.P. VELOCITY	FREQUENCY	dB (SOUND)	SCALED DISTANCE

NAME OF FIRM DOING ANALYSIS	SEISMOGRAPH OPERATOR SIGNATURE

HOLE	PRODUCT	POUNDS

DRILL REPORT

CUSTOMER NAME	CUSTOMER LOCATION (CITY / STATE)
BENCH LOCATION	**DRILLER**

HOLE NUMBER	OVER-BURDEN	SEAMS @ ? DEPTH	MUD @ ? DEPTH	WATER @ ? DEPTH	TOTAL DEPTH	HOLE NUMBER	OVER-BURDEN	SEAMS @ ? DEPTH	MUD @ ? DEPTH	WATER @ ? DEPTH	TOTAL DEPTH
1						26					
2						27					
3						28					
4						29					
5						30					
6						31					
7						32					
8						33					
9						34					
10						35					
11						36					
12						37					
13						38					
14						39					
15						40					
16						41					
17						42					
18						43					
19						44					
20						45					
21						46					
22						47					
23						48					
24						49					
25						50					

DRILLER SIGNATURE

BLASTER SIGNATURE

GENERAL INFORMATION

1. Company Name _____Permit No. _____
2. Location of Blast _____ Date/Time _____
3. Nearest Protected Structure _____

   Direction and Distance (feet) _____
4. Weather Conditions _____
5. Type(s) of material blasted _____
6. Mats or other protection used _____

BLAST INFORMATION

7. Type(s) of explosives used: Powder_____ Primers _____
8. Total weight of explosives used: Powder _____+ Primers _____ = _____ lbs.
9. Blasthole Data: Number _____ Diameter _____ Depth _____

   Burden _____ Spacing _____
10. Stemming Data: Type of Material _____
11. Types of Delays Used and Delay Periods _____
12. Maximum Weight of Explosive Allowed per Delay Period***** (*show approximate formula and answer)*

    _____

    ***Note: Scaled Distance Formula may only be used when scaled distance, Ds, is 90 or greater.**

13. Maximum Weight of Explosives Used per Delay Period _____
14. Weight of Explosives Used per Hole _____
15. Method of Firing and Type(s) of Circuits _____

    _____

SEISMOGRAPH DATA

16. Data and Time of Recording _____
17. Type of Instrument _____
18. Sensitivity _____
19. Calibration Signal or Certificate of Annual Calibration (attachment)
20. Name of Person Taking Readings _____
21. Location of Seismograph (*including distance from blast)* _____

    _____

22. Vibrations Recorded: Longitudinal: _____

Transverse: _____

Vertical: _____

Air Overpressure: _____

23. Name of Person and Firm Analyzing Readings _____

24. **SKETCH OF DELAY PATTERN**

COMMENTS

25. Include any special design features, such as decking. Include reasons and conditions for unscheduled blasts.

_____

_____

_____

_____

Name of Blaster-in-Charge (*Print or Type)* _____

Signature of Blaster-in-Charge _____

Certification Number of Blaster-in-Charge _____

Suggested Equipment List*- Electrical Blasting

*(minimum suggested list; not necessarily all inclusive)

Toolbox or Bag
Initiating Device
Spare Batteries for above
Blasting Multimeter or Galvanometer (suggest digital)
Spare Batteries for above
Electrical Tape
Wire Cutters / Insulation Strippers
Powder Punch
Mirror for looking in holes
Knife (stainless steel)
Loading Pole (wood or PVC)
Burden Pole
25 Ft. Tape
Gloves (nitrile coated for dynamite handling)
50 Ft. or 100 Ft. Depth Gauge, Spare Non-Sparking Weights
Compressed Gas Horn for Alarm
Handheld Radios (communications, guards)
500 Ft. of 12 Gauge Duplex Shooting Line
Reel for above
1000 Ft. of 20 Gauge Duplex Connecting Wire
Shot Report Forms
Pen or Pencil
Scale/ Template
Notebook or Paper
Clinometer or Abney Level
Calculator
Spray Paint for marking hole locations, depth, conditions
Paper Stemming Bags for horizontal or inclined holes

EXPLOSIVES

- Correct Quantity and Type of Detonators (length and delay periods)
- Correct Quantity and Type of Boosters, if required
- Correct Quantity and Size of Cartridged or Packaged Explosives (if used)
- Adequate Quantity and Type of Bulk Explosives

Suggested Equipment List*- Non-electric Blasting

*(minimum suggested list; not necessarily all inclusive)

Toolbox or Bag
Initiating Device
Spare Batteries or 209 Shotgun Primers in Original Packaging
Electrical Tape
Wire Cutters / Insulation Strippers
Powder Punch
Mirror for looking in holes
Knife (stainless steel)
Loading Pole (wood or PVC)
Burden Pole
25 Ft. Tape
Gloves (nitrile coated for dynamite handling)
50 Ft. or 100 Ft. Depth Gauge, Spare Non-Sparking Weights
Compressed Gas Horn for alarm
Handheld Radios (communications, guards)
Splice Kit for Shock Tube
Shot Report Forms
Pen or Pencil
Scale / Template
Notebook or Paper
Clinometer or Abney Level
Calculator
Spray Paint for marking hole locations, depth, conditions
Paper Stemming Bags for inclined or horizontal holes

EXPLOSIVES

- Correct Quantity and Type of Detonators (length and delay periods, both downhole and connectors)
- Correct Quantity and Type of Delay Connectors (length, type, and delay periods)
- Correct Quantity and Type of Boosters, if required
- Correct Quantity and Size of Cartridged or Packaged Explosives (if used)
- Adequate Quantity and Type of Bulk Explosives
- 1500 Ft. of Shock Tube for leadline
- Detonator or Delay Connector for leadline

DMM SAFETY TALK: REVIEW OF BLAST SITE ACCIDENT

A certified blaster was seriously injured on August 27, 1998 while loading a shot at a quartzite mineral mine in Frederick County, Virginia. The victim suffered a fractured elbow and wrist, and multiple bruises when he fell off the 38-feet high free face being loaded with explosives.

The contract blaster was in the process of checking burden (10' – 18') on the front line of boreholes when a portion of the free face he was standing on suddenly fell. The DMM investigation of the accident revealed that a tetrahedral shaped boulder 9' X 8' X 8' fell out of the free face causing the sudden fall of ground beneath the victim. It was also noted that water being pumped from wet boreholes was discharged near the slide area, which would have increased the potential for ground/slope failure.

Drillers and blasters can avoid similar accidents by following safe work procedures prescribed in **DMM Safety & Health Regulations**, which include the following:

(1) Examine the free face, drilling/loading bench, and bench or wall above prior to the start of work, and frequently thereafter to ensure safe work conditions (4VAC 25-40460).
Never work under or near hazardous walls or benches (4VAC 25-40-430).

(2) When measuring the free face to establish the drill pattern or powder factors, stay a safe distance from the edge of the bench or back-break fractures; if it is necessary to work close to the edge where there is a danger of falling, a safety harness and tied-off line must be used (4VAC 25-40-1740).

(3) Ensure that quarry development ensures ground stability by establishing maximum height of benches based on geologic condition of benches and walls, and the size of equipment being used to load and haul shot rock (4VAC 25-40-390).

(4) Ensure that quarry benches used as haul roads are wide enough to allow for construction of safety berms capable of restraining the largest type of mobile equipment being used, and the safe operation and passage of mobile equipment (4VAC 25-40-410).

(5) Ensure that rim of quarry wall is stripped of overburden and trees for at least ten feet, and that remaining overburden is sloped to the maximum slope or angle at which the material remains stable (4VAC 25-40-400).

The working environments of drillers and blasters can pose hazards from equipment being operated, the manner in which the equipment or explosive material is being used, or the area in which the work is being performed. To avoid accidents, all miners and supervisors must consider the task at hand, and how to accomplish the assigned task without injury to themselves, others, or property/equipment.

BLASTING AND GEOLOGY

By
Robert E. Morgan
Division of Mineral Mining (DMM)
Virginia Department of Mines, Minerals, & Energy

A DMM technical presentation to the Ninth Annual Pennsylvania Drilling & Blasting Conference, November 11-12, 1999 sponsored by the Pennsylvania State University Department of Energy and Geoenvironmental Engineering, the International Society of Explosives Engineers, and the Pennsylvania Department of Environmental Protection.

Drillers and blasters often find themselves working in various types of rock with significantly different geologic characteristics. Geologic conditions may change from mine to mine, or even bench to bench in some rock formations. Failure to adjust drilling and blasting design to be consistent with changes in geology can result in unequal burden on the post blast face, or an increased risk of bench failure while drilling. The risk of an accident or poor shot performance can be significantly reduced by careful examination of geologic conditions of the quarry bench, and making any necessary adjustments to the drill pattern or shot design.

Some of the geologic features which can serve as a clue in identifying conditions which could adversely impact drilling and blasting include the following:

- "Backbreak" (post blast fractures) near the edge of bench
- "Jointing" (fractures) which can disrupt fragmentation
- Limestone "dipping" toward free face of bench which can increase potential for excessive burden ("toe") at floor level of bench.
- Granite "slip" which can increase potential for material sliding from free face during drilling or after detonation of blast
- "Solution cavities" in limestone bench which can result in excessive powder accumulation and subsequent flyrock
- Soft rock over hard rock in bench to be blasted which can result in excessive energy in top portion of borehole
- Water seepage resulting in wet boreholes requiring different type of explosive product
- "Fault zone" (significant fracturing) in a distinct area of quarry which increases potential for unstable ground conditions

Knowledge gained by careful examination of the bench, previous blast reports, and the driller's logbook is critical in developing a safe and effective shot design. A sudden increase in drill penetration rate speaks volumes about the rock behind the free face, which cannot be seen. It is

vital that the driller convey this information to the blaster by means of an accurate drill logbook which details depth and condition of each borehole. **The more geologic information available to the blaster, the better the design of the shot.**

Blasters can avoid the mistakes of others that have resulted in unstable free face, bench failure, flyrock or other undesirable effects by careful consideration of geologic conditions; then developing drill patterns and shot designs that utilize the minimum amount of powder required to achieve the desired fragmentation.

HANDLING MISFIRES AT MINERAL MINES
(Blaster training handout)

By definition, misfire means the partial or complete failure of a blast to detonate as planned; and the cause can often be traced back to an error in executing the planned blast. Some of the specific causes include the following:

(1) failure to connect all series or legwires into the electric circuit.

(2) kink or broken connection in shock tubing causing disruption of ignition.

(3) failure to adequately test and charge tubing with initiation gas.

(4) broken connection of wiring or tubing due to person walking over connections.

(5) lightning strike at or near the blast site.

(6) loaded borehole detonating out of sequence

These types of misfires can be eliminated by careful planning and close supervision of loading of shot by the certified blaster in charge at the blast site. If a misfire should occur, some of the following disposal methods may be appropriate depending on the type of detonation system:

(1) do not approach suspected misfire area for at least 15 minutes, regardless of type initiation system.

(2) carefully approach misfire area to check for positive indicators of a misfire; surface lines, etc.

(3) if surface connecting lines or wires are intact , test and re-fire if sufficient burden provided.

(4) if surface or downlines tubing or wiring is not intact, attempt to remove stemming material to re-prime;
if electric detonators are used, do not use a method (blowing out with air) which could create static electricity.

(5) if sufficient burden is not present, add additional burden for protection by use of dumped material or blast mat.

(6) attempt to wash explosive materials from borehole and remove primer.

Misfires must be handled by a certified blaster. The specific methods employed will depend on the type of explosives and detonators used, and the actual blast site conditions. The misfire area must be barricaded and posted with warning signs until the hazard has been removed. Technical representatives of the powder company can provide valuable information and assistance in disposal of misfires. Misfires should be avoided by careful planning of the shot, and close supervision of loading personnel and activities.

GENERAL RULES OF THUMB FOR BLASTING

1. Burden should at least equal 2 times the diameter of borehole in feet; if diameter is 6½ inch burden should be 13 feet.

2. Spacing should at least equal 1½ times burden; if burden is 13 feet, spacing should be 19.5 feet.

3. Primer cartridge length should at least equal half the borehole diameter; if diameter is 6½ inch, cartridge length should be at least 3¼ inch.

4. Stemming length should at least equal burden; if burden is 13 feet, stemming should be at least 13 feet.

5. Powder factors should be based on density and other geologic characteristics of rock to be blasted.

6. Explosives in boreholes should be totally coupled (completely fills borehole diameter); packaged units can be slit and tamped to achieve coupling.

7. Certified blaster should always verify actual distances to inhabited buildings and limits for airblast and ground vibration prior to designing and loading a shot.

Once specific data has been obtained from initial/test shots, the blaster can adjust these conservative values to reflect actual conditions at mine.

GEORGE P. WILLIS
ACTING DIRECTOR

DIVISIONS
ENERGY
GAS AND OIL
MINED LAND RECLAMATION
MINERAL MINING
MINERAL RESOURCES
MINES ADMINISTRATION

COMMONWEALTH OF VIRGINIA

Department of Mines, Minerals and Energy
Division of Mineral Mining
900 Natural Resources Drive, Ste.400
Charlottesville, VA 22903
(434) 951-6310
Conrad T. Spangler III, Division Director

MEMORANDUM

TO: All Licensed Mine Operators and Blasting Contractors

FROM: _____
Conrad T. Spangler, Division Director

SUBJECT: Flyrock Prevention

DATE: September 28, 2006

The mineral mine community in Virginia has experienced a number of flyrock incidents in the recent past. More specifically, there have been 5 reported incidents since December 2003; 4 of them have occurred since March 2005.

This is a matter of grave concern to the Division. All of these incidents had the potential to cause death or serious personal injury to citizens.

All operators and blasting contractors in the Commonwealth of Virginia are urged to review their policies and blasting procedures to assist in the elimination of this problem.

Furthermore, the Division strongly recommends that all operators and blasting contractors provide additional training in flyrock prevention to their certified blasters.

The occurrence of flyrock can be considered an “imminent danger”, and result in the issuance of a Closure Order to the operator. All incidents of flyrock should be reported to the Division of Mineral Mining by the quickest available means.

The Division stands ready to provide assistance to all operators and blasting contractors, including training, training materials, and on-site assistance.

If you have any questions or requests for assistance, you may contact your mine inspector, Tom Bibb, or me at (434) 951-6310.

Enclosure

DEPARTMENT OF MINES, MINERALS AND ENERGY
DIVISION OF MINERAL MINING

LAWS AND REGULATIONS APPLICABLE TO THE PREVENTION OF FLYROCK

REFERENCE:

Mineral Mine Safety Laws of Virginia 2003 Edition

A. Section 45.1-161.292:2. Definitions

"Imminent Danger" – means the existence of any condition or practice in a mine which could reasonably be expected to cause death or serious personal injury before such condition or practice can be abated.

B. Section 45.1-161.292:64. Closure Order

A. The Director or a mine inspector shall issue a closure order requiring any mine or section thereof cleared of all persons, or equipment removed from use, and refusing further entry into the mine of all persons except those necessary to correct or eliminate a hazardous condition, when (i) a violation of this chapter and Chapters 14.5 (§ 45.1-161.293 et seq.) and 14.6 (§ 45.1-161.304 et seq.) has occurred, which creates an imminent danger to the life or health of persons in the mine; (ii) a mine fire, mine explosion, or other serious accident has occurred at the mine, as may be necessary to preserve the scene of such accident during the investigation of the accident; (iii) a mine is operating without a license, as provided by § 45.1-161.292:30; or (iv) an operator to whom a notice of violation was issued has failed to abate the violation cited therein within the time period provided in such notice for its abatement; however, a closure order shall not be issued for failure to abate a violation during the pendency of an administrative appeal of the issuance of the notice of violation as provided in subsection D of § 45.1-161.292:63. In addition, a technical specialist may issue a closure order upon discovering a violation creating an imminent danger.

Virginia Safety and Health Regulations for Mineral Mining 2004 Edition

I. 4 VAC 25-40-10 Definitions

"Flyrock"- means any uncontrolled material generated by the effect of a blast that was hazardous to persons, or to property not owned or controlled by the operator.

II. 4 VAC 25-40-800 Use of Explosives

D. The design and loading of a blast shall provide sufficient burden, spacing, and stemming to prevent flyrock and other dangerous effects.

DMM Safety Alert:

Flyrock Impacting Highways

Two flyrock incidents have occurred at Virginia mineral mines in 2013. On both occasions flyrock was thrown onto a busy highway where traffic had not been stopped prior to initiating the blast. In May, flyrock traveled approximately 400 feet striking one vehicle and damaging another when it ran over a football size rock that had landed in the highway. In August, flyrock traveled approximately 1,200 feet and landed in the roadway; no vehicles were struck or damaged in this incident. Fortunately, no one was injured in either of these incidents. Mine operators and blasters are reminded that rock is capable of traveling considerable distances. In a 2005 incident in Virginia, rock flew 1,400 feet and penetrated a commercial building's roof. In 2007, rock traveled 1,700 feet and landed near a primary crushing plant that was in operation. It is the duty of the certified blaster to delineate the blast area, which should include all areas on and off the mine site, including highways, that might be impacted by flying material. Virginia Safety and Health Regulations for Mineral Mining, **4 VAC 25-40-830**, states, " prior to blasting near a mine haul road or public highway, traffic shall be stopped at a safe distance". Blasters can minimize the risk of flyrock through careful planning and by following the recommendations below, especially when blasting near highways.

- Blasters should pay close attention to stemming issues with top level shots when there are varying amounts of weathered or unconsolidated material present.
- The blaster must closely examine the drill log and blast site geology and make appropriate adjustments when loading to account for significant changes in geology.
- When angled holes are used, the blaster must be certain that the burden and spacing has not been affected by improper drill set up or drill string wander.
- Regardless of actual distance, if there is anything about the shot that causes the blaster concern, traffic on nearby highways must be stopped at a safe distance. Personnel performing traffic control must be certified by VDOT and follow their procedures.
- Certified blasters and mine management must always remain aware of their responsibility for blasting effects on and off the mine site.

Busy highway impacted by recent flyrock incident

Virginia Division Of Mineral Mining, 900 Natural Resources Dr., Suite 400, Charlottesville, VA 22903, 434-951-6310, www.dmme.virginia.gov/dmm

FLYROCK HAZARD ALERT

"Flyrock" means any uncontrolled material (usually rock) that is thrown by a blast and is hazardous to persons, or to property not owned or controlled by the mine operator. Flyrock can travel 3,000 feet or more, reach speeds of 400 miles per hour, and can penetrate buildings, smash vehicles, and cause great bodily harm.

From December 2003 through August 2006, 5 serious flyrock incidents have occurred from blasting at surface mineral mines/quarries in Virginia. All of these incidents had the potential for very serious or fatal results. Fortunately, no one was injured, though significant damage to property (vehicles and structures) did occur in each of these incidents.

CAUSES OF FLYROCK

Investigations have found that flyrock is often the result of:

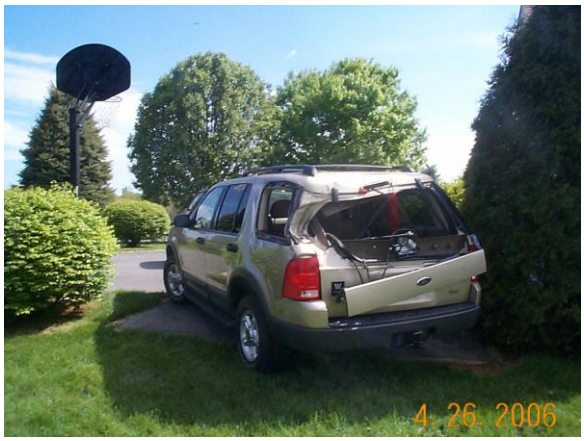

- Blast holes with insufficient stemming
- Blast holes with excessive burden
- Blast holes with insufficient burden
- Secondary blasting with insufficient burden (toe holes, boulders)
- Weaknesses in the rock structure (mud seams, faults, cavities, fractures, etc.)
- Excessive energy due to high powder factors
- Insufficient energy due to low powder factors

BEST PRACTICES

Blasters can minimize the risk of flyrock by careful planning and by utilizing the following practices:

- Adjusting the drill pattern and/or hole depths for geology, face geometry, and shot surface topography
- Examining the drill log and blast site geology, and making appropriate adjustments when loading
- Accurately measuring burden on the free face and succeeding rows
- Adjusting the explosive charge in the blast hole for the actual burden
- Adjusting the stemming depth and/or decking to maintain adequate burden on all sections of the blast hole
- Adjusting timing to ensure adequate time for rock movement
- Using extraordinary caution when shooting boulders or toe holes with small burdens

Blasters now have a wide variety of initiation devices and explosive products that allow for safe, effective blasting. The certified blaster has the responsibility to use those products safely. He must carefully evaluate the conditions, design the shot, supervise the loading, and ensure the safety of miners and the public during detonation.

PREVENT FLYROCK – THINK BEFORE YOU LOAD

BIBLIOGRAPHY

Blasting Vibration Damage and Noise Prediction and Control. 1 September 1989 <http://www.usace.army.mil/inet/usace-docs/s-r/et11110-1-142/toc.html>.

Certified Blaster Guide for Surface and Underground Certification Course. Lynchburg, Virginia: Department of Mines, Minerals, and Energy. Division of Mineral Mining, 1993.

Evaluation of the Dyno-Nobel Digishot Electronic Blast Initiation System--- Requirements for Shunting and Circuit Testing. Harry Verakis and Tom Lobb, MSHA Technical Support Approval and Certification Center. PAR 0095053 A10, March 2008. U.S. Department of Labor, Mine Safety and Health Administration.

Hopler, Robert B. ISEE Blasters' Handbook™. Cleveland, Ohio: International Society of Explosives Engineers, 1998.

Mineral Mine Safety Laws of Virginia. Charlottesville, Virginia: Department of Mines, Minerals and Energy. Lexis Law Publishing, 2012.

Safety and Health Regulations for Mineral Mining. Charlottesville, Virginia; Department of Mines, Minerals and Energy. Division of Mineral Mining, Commonwealth of Virginia, 2012.

Surface Blaster Certification Study Guide. Big Stone Gap, Virginia: Department of Mines, Minerals, and Energy. Division of Mines, 1994.

For information on assessing structural damage please refer to Blasting Damage and Other Structural Cracking.*

*Blasting Damage and Other Structural Cracking (A Guide for Adjusters and Engineers) American Insurance Services Group, Inc.; Property Claim Services, Third Edition 1990.